MAY 2001

WRL Research Report 2001/1

Power Evaluation of a Handheld Computer: A Case Study

Marc A. Viredaz
Deborah A. Wallach

COMPAQ **Western Research Laboratory** 250 University Avenue Palo Alto, California 94301 USA

The Western Research Laboratory (WRL), located in Palo Alto, California, is part of Compaq's Corporate Research group. WRL was founded by Digital Equipment Corporation in 1982. We focus on information technology that is relevant to the technical strategy of the Corporation, and that has the potential to open new business opportunities. Research at WRL includes Internet protocol design and implementation, tools to optimize compiled binary code files, hardware and software mechanisms to support scalable shared memory, graphics VLSI ICs, handheld computing, and more. As part of WRL tradition, we test our ideas by extensive software or hardware prototyping.

We publish the results of our work in a variety of journals, conferences, research reports, and technical notes. This document is a research report. Research reports are normally accounts of completed research and may include material from earlier technical notes, conference papers, or magazine articles. We use technical notes for rapid distribution of technical material; usually this represents research in progress.

You can retrieve research reports and technical notes via the World Wide Web at:

http://www.research.compaq.com/wrl/

You can request printed copies of research reports and technical notes, when available, by mailing your order to us at:

Technical Report Distribution
Compaq Western Research Laboratory
250 University Avenue
Palo Alto, California 94301 U.S.A.

You can also request reports and notes by sending e-mail to:

`WRL-techreports@research.compaq.com`

Power Evaluation of a Handheld Computer: A Case Study

Marc A. Viredaz
Deborah A. Wallach

May 2001

Abstract

Low-power design and power management are becoming crucial for handheld and wearable computers given increasingly higher requirements for computing power but only small increases in battery capacity. The main prerequisite for both techniques is a good understanding of the electrical-power behavior of the target system.

This paper presents a power evaluation of the *Itsy* pocket computer, a flexible research platform developed at Compaq's *Western Research Laboratory (WRL)*. Because the Itsy was designed as a research platform, yet is a realistic handheld computer, it is an ideal system for such a study. Both the methodology and the results are presented. A discussion of system design implications follows. Finally, the Itsy is compared to other platforms.

Contents

Contents **v**

List of Figures **vi**

List of Tables **vi**

1 Introduction **1**

2 Methodology **1**
2.1 Experimental setup 2
2.2 Battery lifetime 2
2.3 Average power 2
2.4 Error analysis 3

3 Benchmarks **3**

4 Results **4**
4.1 Hardware analysis 4
4.2 Benchmark analysis 5

5 Discussion **5**
5.1 Low-power hardware 5
5.2 Power management 7
5.3 Comparison with commercial handhelds 7
5.4 Useful additional peripherals 7

6 Related work **7**

7 Conclusion **8**

Acknowledgements **8**

References **8**

A Addendum to *Power Evaluation of Itsy Version 2.4* **9**

B Power breakdown **12**
B.1 Error analysis 13

C Multimeter configuration for the power-breakdown experiments **14**

D Complete results for the power-breakdown experiments **15**

List of Figures

1 Experimental setup for the battery lifetime measurements . . . 2
2 Power domains on Itsy . . . 3
3 Average power breakdown of the Itsy computer . . . 6

List of Tables

1 Average power and battery lifetime of the Itsy computer . . . 5
2 Relative average power breakdown of the Itsy computer . . . 6
3 Benchmark results: deep sleep . . . 9
4 Benchmark results: sleep . . . 10
5 Benchmark results: sleep, daughter-card (DC) . . . 10
6 Benchmark results: sleep, LCD . . . 10
7 Benchmark results: idle, 59.0 MHz, low voltage (LV) . . . 10
8 Benchmark results: idle, 59.0 MHz . . . 10
9 Benchmark results: idle, 132.7 MHz . . . 10
10 Benchmark results: idle, 206.4 MHz . . . 10
11 Benchmark results: WAV, 59.0 MHz . . . 11
12 Benchmark results: WAV, 206.4 MHz . . . 11
13 Benchmark results: DECtalk, 73.7 MHz, low voltage (LV) . . . 11
14 Benchmark results: DECtalk, 73.7 MHz . . . 11
15 Benchmark results: DECtalk, 206.4 MHz . . . 11
16 Benchmark results: dictation, daughter-card (DC), 206.4 MHz . . . 11
17 Benchmark results: MPEG-1, 206.4 MHz . . . 11
18 Quantities used to calculate the power corresponding to the sense resistors . . . 12
19 Measured average power for a complete Itsy . . . 15
20 Measured average power for an Itsy with the speaker and microphone disconnected . . . 16
21 Measured average power for an Itsy with the LCD disconnected . . . 17
22 Average power breakdown . . . 18
23 Relative average power breakdown . . . 19

Power Evaluation of a Handheld Computer: A Case Study

Marc A. Viredaz
Compaq Computer Corporation
Western Research Laboratory
250 University Ave, Palo Alto, CA 94301
(++1 650) 617 3314
viredaz@computer.org

Deborah A. Wallach
Compaq Computer Corporation
Western Research Laboratory
250 University Ave, Palo Alto, CA 94301
(++1 650) 617 3315
Deborah.Wallach@compaq.com

Abstract

Low-power design and power management are becoming crucial for handheld and wearable computers given increasingly higher requirements for computing power but only small increases in battery capacity. The main prerequisite for both techniques is a good understanding of the electrical-power behavior of the target system.

This paper presents a power evaluation of the Itsy *pocket computer, a flexible research platform developed at Compaq's* Western Research Laboratory (WRL). *Because the Itsy was designed as a research platform, yet is a realistic handheld computer, it is an ideal system for such a study. Both the methodology and the results are presented. A discussion of system design implications follows. Finally, the Itsy is compared to other platforms.*

1. Introduction

The computing requirements of battery-powered systems are increasing faster than battery capacity. Large, heavy batteries are acceptable for neither handheld nor wearable computers. Therefore, low-power design and power management are becoming crucial. One of the main challenges limiting these techniques has been the lack of a detailed breakdown of the system power under representative workloads. The understanding provided by such a breakdown can be used to improve the power consumption of next-generation systems. It is also necessary to optimally manage the fixed amount of energy provided by the battery.

This paper presents one of the first comprehensive studies of the power breakdown for a handheld device. We used the *Itsy* pocket computer. The aim of the Itsy project was to develop flexible research platforms for pocket computing [6]. Several versions of the hardware were built; all were based on the StrongARM SA-1100 processor [9]. This study concentrates on the Itsy version 2 (more precisely Itsy v2.4), a complete handheld computer that is 118 mm × 65 mm × 16 mm and weighs only 130 grams.

Although the power of a system can easily be measured by expensive, highly sophisticated instruments, moderate-cost instruments (easily accessible in any commercial or academic environment) usually suffice. However, an understanding of the limitations of the chosen instruments and methodology is necessary to obtain meaningful results. Our study devotes special attention to this issue.

This paper makes several key contributions. We measure the battery lifetime of the Itsy for different real-world workloads and quantify the effective battery voltage. We also measure the power breakdown among various system components for each workload. We use this data to understand the interplay of applications, hardware components, voltage, and frequency. Finally, we use the insights from these two parts to discuss possible optimizations for low-power design and strategies for power management.

2. Methodology

The Itsy power analysis was conducted in two phases. First, the battery lifetime was measured, while continuously monitoring the total power consumption [19]. Later, the battery was replaced by a power supply and the power breakdown among Itsy's building blocks was evaluated. A careful error analysis was conducted for all measurements.

Battery-lifetime measurements are extremely time consuming and are rarely done. In this study, the fully automated run of the benchmark suite lasted two months. However, we felt that a battery-lifetime analysis was necessary for two reasons. First, system power consumption is not constant. Instead, it varies as the battery voltage decreases. Also, the battery capacity varies with the load. Even with realistic loads, the capacity can decrease by 20 – 40 % [12].

From the first phase data, we can infer the effective battery voltage, that is, the voltage at which the power con-

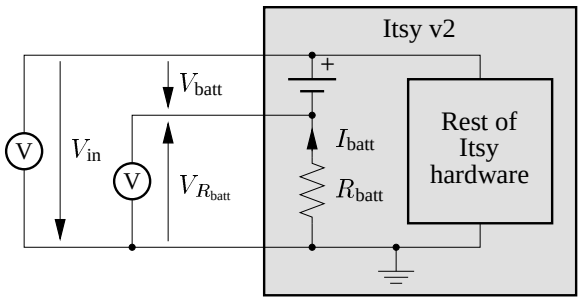

Figure 1. Experimental setup for the battery lifetime measurements.

sumption is identical to the average power across the battery lifetime. This voltage varies slightly with the load. The Itsy's lithium-ion battery is at 4.1 V when fully charged. Its effective voltage is between 3.75 V and 3.85 V in sleep mode, around 3.80 V while the processor is idle (idle mode), and between 3.60 V and 3.80 V while the processor is doing useful work (run mode). The average effective battery voltage across all the experiments is 3.77 V.

For the second phase, we measured the power breakdown with the battery replaced by a power supply set to 3.75 V. This voltage is close to the effective battery voltage for all benchmarks, with a slight bias towards run-mode benchmarks. Fixing the supply voltage near the effective battery voltage should yield a power breakdown similar to the breakdown during the complete battery lifetime. In order to minimize run-to-run variation, we ran each benchmark for the greater of 20 minutes or 25 iterations.

2.1. Experimental setup

Figure 1 shows the experimental setup used for the battery-lifetime measurements. The Itsy v2 features a precision sense resistor R_{batt} in series with the battery. Two external multimeters [7] monitor the input voltage V_{in} and the voltage drop across the sense resistor $V_{R_{\text{batt}}}$. Both the Itsy and the multimeters are connected to a host computer through serial links. Although not shown in Figure 1, a power supply and a few relays let the host computer run a series of experiments without operator intervention, charging the battery between experiments.

For the power-breakdown measurements, a similar setup of 11 multimeters is used to measure all the voltages shown in Figure 2. From these measurements, the power consumption is divided into 9 elementary power domains:

$\boldsymbol{P_{\text{mon}}}$**:** The power dissipated by the battery monitor and some leakage through the charger circuit.

$\boldsymbol{P_{\text{main sup}}}$**:** The power dissipated by the digital and analog power supplies and the reset circuit. This domain also includes the Itsy's white LED.

$\boldsymbol{P_{\text{spkr}}}$**:** The power dissipated by the speaker.

$\boldsymbol{P_{\text{codec}}}$**:** The power dissipated by the analog part of the codec. This domain also includes the microphone and touchscreen.

$\boldsymbol{P_{\text{DRAM}}}$**:** The power dissipated by the DRAM.

$\boldsymbol{P_{\text{LCD}}}$**:** The power dissipated by the LCD. This domain also includes the LCD backlight.

$\boldsymbol{P_{\text{main}}}$**:** The power dissipated by the I/Os of the StrongARM SA-1100 processor and the rest of the digital logic: flash memory, daughter-card buffers, serial interfaces, digital part of the codec, 2-axis accelerometer, and buttons.

$\boldsymbol{P_{\text{core sup}}}$**:** The power dissipated by the core power supply.

$\boldsymbol{P_{\text{core}}}$**:** The power dissipated by the core of the StrongARM SA-1100 processor.

These domains are measured differently. Power terms such as P_{DRAM} and P_{core} are *direct measurements*. The power to the supplies, $P_{\text{main sup}}$ and $P_{\text{core sup}}$, are *differential measurements* (i.e., the subtraction of two measured quantities), taken during the same run. Finally, the LCD power P_{LCD} and the speaker power P_{spkr} are respectively measured by running the same workload with the LCD or speaker disconnected. These are also differential measurements, but were taken during a different run. Each term only reflects the power dissipated by the individual domain itself.[1]

2.2. Battery lifetime

The battery lifetime is measured by the host computer. While running, the Itsy sends a string of two characters (i.e., a character and a new line) at regular intervals. The duration of this interval represents a tradeoff between the overhead to send characters and the battery-lifetime measurement resolution. It is chosen separately for each experiment.

2.3. Average power

The average power of an electrical system is the time integral of the instantaneous power (voltage-current product) divided by the total time. Since the moderate-cost instruments we used are not capable of performing such an operation, an approximation is used instead.

All multimeters are configured to perform a predefined number N of measurements while calculating the average voltage and keeping track of the minimum and maximum

[1] For comparison with other numbers published in the literature, it is also possible to calculate the difference of the *total* power between two corresponding runs (e.g., with and without a speaker), which also includes the overhead due mainly to the inefficiencies of power supplies.

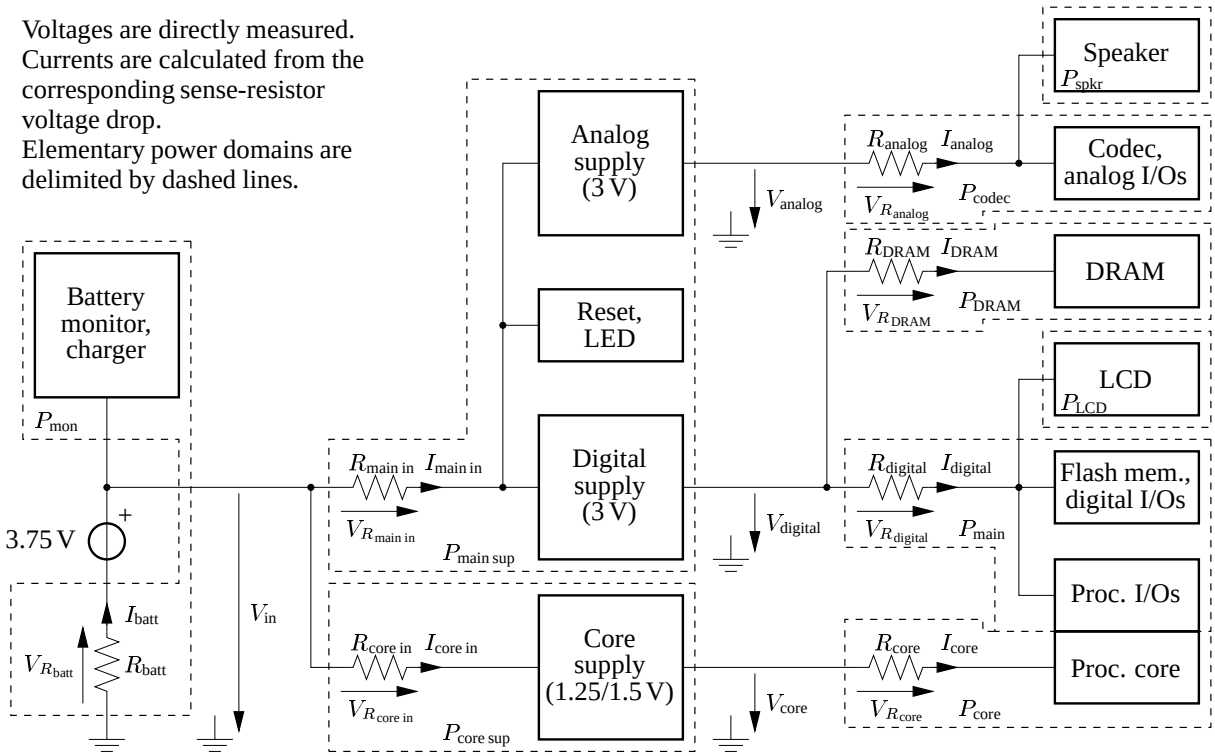

Figure 2. Power domains on Itsy.

values. At the end of every acquisition (set of N measurements), the average, minimum, and maximum voltages are up-loaded to the host computer which also records the start and end time of the acquisition.

Currents are calculated from the corresponding voltage drops across the sense resistors using Ohm's law: $I = V_R/R$. For each acquisition a, an approximation $\widetilde{P}_{\text{avg},\,a}$ of the average power $P_{\text{avg},\,a}$ is calculated as:

$$\widetilde{P}_{\text{avg},\,a} \quad = \quad V_{\text{avg},\,a} \cdot I_{\text{avg},\,a}$$

Finally, the average power P_{avg} during an experiment is the time-weighted mean of all terms $\widetilde{P}_{\text{avg},\,a}$.

2.4. Error analysis

The importance of making a complete error analysis can not be over-emphasized, since the most important terms are often different from the ones which intuitively seem to matter the most. The error analysis for the battery-lifetime experiments has been described in a Technical Note [19]. The error analysis for the power-breakdown experiments can be similarly inferred. Most of the analysis is fairly conventional and comes directly from the specifications of the sense resistors and the multimeters, as well as from the software instrumentation and initialization. However, the most interesting error is the one incurred from using the approximation $\widetilde{P}_{\text{avg},\,a}$ for the average power. We have shown that this error is bounded by the term:

$$\varepsilon_{\text{avg},\,a} \quad = \quad \frac{N-1}{2 \cdot N} \cdot \frac{(V_{\text{max},\,a} - V_{\text{min},\,a}) \cdot (I_{\text{max},\,a} - I_{\text{min},\,a})}{\widetilde{P}_{\text{avg},\,a}}$$

Because this term is directly proportional to the difference between the per-acquisition maximum and minimum of the voltage and current, the multimeters need to record the minimum and maximum values. Also, note that this error term can become arbitrarily large if these differences are large. Therefore, the acquisition time must be carefully chosen to keep this term reasonable. An earlier study [18] showed that long acquisition times can result in large error terms, even if the actual errors are probably much smaller.

3. Benchmarks

The following benchmarks were used for this study:

Deep sleep: The processor is in sleep mode [9]. All units that can be disabled or unpowered are turned off.

Sleep: Same as the deep sleep benchmark, but the DRAM is in self-refresh mode.

Sleep, LCD: Same as the sleep benchmark, but the LCD displays a static monochrome image.

Idle: Itsy is running the Linux operating system without a workload. Thus, the processor is mostly in idle mode.

WAV: Itsy is playing an audio file in WAV format with the speaker at close to full power (same file and settings as for the MPEG-1 benchmark).

DECtalk: Itsy is generating an audio stream from a text file (text-to-speech), using the DECtalk program.

MPEG-1: Itsy is playing a video file in MPEG-1 format, using a modified version of the `easympeg` program and `mpeg_lib` libraries. The audio is produced by playing the matching audio WAV file.

All idle-mode and run-mode experiments were run under the Linux operating system. The LCD was enabled with the backlight off. The touchscreen and buttons were ready to accept input, but were never actually used. The audio was only enabled when used. The serial interfaces and the LED were left disabled, while the 2-axis accelerometer was always on. This configuration simulates a system as typically used when not connected to a host computer. No daughter-card was used during these experiments, so the daughter-card buffers stayed constantly disabled.

4. Results

Table 1 presents the average power and battery lifetime for the first-phase experiments.[2] The benchmarks were run at a variety of frequencies and with the processor core at two different voltages. Note that all physical quantities presented in this document (power and time) are rounded to the closest least-significant shown digit and errors are rounded to the next highest such digit.

The lifetime of the Itsy greatly varies depending on the workload. In sleep mode, the Itsy can keep the memory refreshed for almost 13 days. When not in sleep mode, the battery lifetime varies from 40 hours, when idle, down to 2.4 hours for our most power-hungry benchmark, the real-time MPEG-1 player. Real-life usage should result in a lifetime somewhere between these two values. We expect that the battery will always last a full day for most users. Not surprisingly, the battery capacity drops slightly with the higher workloads.

Table 1 also shows the average power data taken for the corresponding experiments during the second phase. As expected, this figure is always within the error on the average power during the battery-lifetime experiments, which confirms that 3.75 V was an appropriate choice as an effective battery voltage.

To understand exactly where the power was being used, we then measured the power breakdown for all processor frequencies higher than the minimum frequency required to run the benchmark. From 59 MHz to 88 MHz, experiments were also run at the low core voltage (V_{core} = 1.25 V). Figure 3 shows a representative subset of this data, while Table 2 presents the same information in relative terms.

4.1. Hardware analysis

Despite being a platform for research, the power characteristics of the Itsy are well-behaved. For example, units that are unused during some or all of the sleep-mode benchmarks (processor core, DRAM, LCD, and speaker) and idle-mode experiments (speaker) draw an unmeasurably small amount of power.

Units that do not depend on the processor frequency have a constant power dissipation. The power term P_{main}, which includes the 3 V processor I/Os, stays approximately constant with each benchmark. The codec power P_{codec} hardly changes across all sound-producing experiments. The speaker power P_{spkr} is constant for all WAV and MPEG-1 benchmarks (same sound file) as well as across all DECtalk benchmarks. DECtalk is quieter than WAV and thus uses less speaker power. The LCD power P_{LCD} is the same for all Idle, WAV, and DECtalk benchmarks.

At constant voltage, the core power P_{core} increases monotonically with the frequency. This term is significantly reduced by decreasing the core voltage V_{core} from 1.5 V to 1.25 V, while units other than the processor are not affected. Unexpectedly, the power dissipated by the 3 V processor I/Os also decreases at the low core voltage, as reflected by the term P_{main}.

The DRAM behavior requires explanation. Ideally, the DRAM power P_{DRAM} should only marginally depend on the processor frequency, since the duration of memory accesses should be constant. However, the StrongARM SA-1100 processor implements DRAM timings as multiples of the processor clock period. Due to rounding, access times decrease from 59 MHz to 118 MHz and are approximately constant at higher frequencies. This trend is reflected by the DRAM power consumption.

As is typical, the power supply efficiencies are between 75 % and 95 % (they can be calculated/approximated from $P_{\text{core sup}}$ and $P_{\text{main sup}}$). However, except in sleep mode, their combined overhead $P_{\text{main sup}} + P_{\text{core sup}}$ is always smaller than 16 %.

The battery monitor power P_{mon} increases with the total power, mostly due to the sense resistor R_{batt} itself. However, its overhead is always about 1 %, except in sleep mode.

[2] When these results were first reported [19], the power presented did not include the power dissipated by the sense resistor (i.e., it was not considered to be part of the system). In the present study, the power dissipated by every sense resistor is always included in the corresponding power, as shown in Figure 2. Because the sense resistor used to measure the battery current is required by Itsy's battery monitor, it should probably be considered as part of the system. Therefore, the average power reported in Table 1 is based on the same data, but has been re-calculated (as has its error) to account for the sense-resistor power.

Benchmark	Freq. [MHz]	V_{core} [V]	Battery-lifetime exp. Power [mW]	Power Error	Lifetime [h]	Lifetime ([days])	Lifetime Error	Capacity [W · h]	Breakdown exp. Power [mW]	Power Error
Deep sleep	—	—	4.58	9.5 %	500.0	(20.8)	4.3 %	2.29	4.40	4.0 %
Sleep	—	—	7.40	5.8 %	308.5	(12.9)	3.5 %	2.28	7.18	2.9 %
Sleep, LCD	—	—	26.2	2.6 %	87.0	(3.6)	2.6 %	2.27	25.8	1.6 %
Idle	59	1.25	55.4	4.8 %	40.6		4.9 %	2.25	55.5	1.7 %
Idle	59	1.5	69.6	6.7 %	32.3		6.8 %	2.25	68.8	1.6 %
Idle	133	1.5	83.0	6.2 %	27.0		6.3 %	2.24	81.9	1.6 %
Idle	206	1.5	101	5.8 %	22.0		6.1 %	2.23	99.3	1.5 %
WAV	59	1.5	279	3.6 %	7.75		4.2 %	2.16	277	1.3 %
WAV	206	1.5	311	4.4 %	6.88		4.4 %	2.14	308	1.4 %
DECtalk	74	1.25	353	2.6 %	6.11		3.0 %	2.16	350	1.3 %
DECtalk	74	1.5	398	2.8 %	5.35		3.4 %	2.13	393	1.2 %
DECtalk	206	1.5	402	4.3 %	5.29		3.7 %	2.13	394	2.1 %
MPEG-1	206	1.5	826	5.3 %	2.42		3.8 %	2.00	808	1.5 %

Table 1. Average power and battery lifetime of the Itsy computer. The fourth column is the total power averaged over a complete battery discharge on three Itsy systems. The sixth column is the average battery lifetime for the same set of experiments. The eighth column is the effective battery capacity (power-lifetime product). Finally, The ninth column is total average power of one Itsy with the battery replaced by a 3.75 V power supply.

4.2. Benchmark analysis

Excluding DECtalk, all the benchmarks used in this study are fixed-duration tasks. The time spent in sleep or idle mode depends on the user, while the time required by the WAV and MPEG-1 benchmarks depends on the content being played. In this particular (but important) class of applications, energy is directly proportional to power.

The total idle-mode power varies significantly with the frequency. The slight increase in the DRAM power P_{DRAM} due to longer access times (DRAM and LCD refresh) is largely offset by the dramatic decrease of the core power P_{core}. An obvious conclusion is that the processor should preferably switch to the lowest frequency and voltage before entering idle mode.

A similar behavior happens when playing a WAV file in real time. In this case, there is only a small amount of computation to be performed per time unit and the system is mostly idle. However, the frequency has a smaller relative effect on the total power, because the speaker draws 32 % to 38 % of the power, which also increases the power dissipated by the supply itself.

The DECtalk benchmark presents a very interesting behavior. Its total power consumption is approximately equal at 74 MHz and at 206 MHz, but is higher for intermediate values. At 74 MHz, the processor cycles are fully utilized. As the frequency is increased, the processor spends more and more time in idle mode. The behavior of the total power results from the interplay of the core power P_{core} which increases with frequency, the DRAM power P_{DRAM} which decreases with frequency, and the term P_{main} which bears no direct relation to the frequency.

The Itsy can run DECtalk at a variety of speeds. However, the higher the frequency, the faster the program runs (it reaches a plateau at 177 MHz). Therefore, the total energy consumed for running the task should be considered. The energy used decreases slightly from 74 MHz to 206 MHz (from 170 J to 146 J), but does not do so monotonically (e.g., more energy is used at 147 MHz than at 133 MHz or 118 MHz). The least amount of energy is used when running at 206 MHz, but 88 MHz at the low core voltage is a very close second at 149 J. These results are important because they show that the interplay of different units can result in entirely non-intuitive power and energy behavior.

5. Discussion

5.1. Low-power hardware

Not surprisingly, the bulk of the power in idle and run mode is taken by the processor (P_{core} and P_{main}) and the DRAM. In future systems, we expect that most of the power savings will come from these components, as VLSI technology improves. Figure 3 also shows that the speaker can be a significant power term. Since most of the speaker power is transmitted as sound, we do not expect much improvement unless the use of headsets becomes commonplace.

Accessing the DRAM requires a fair amount of power. However, the percentage of power needed to keep DRAM refreshed is small in idle and run modes. Therefore, in-

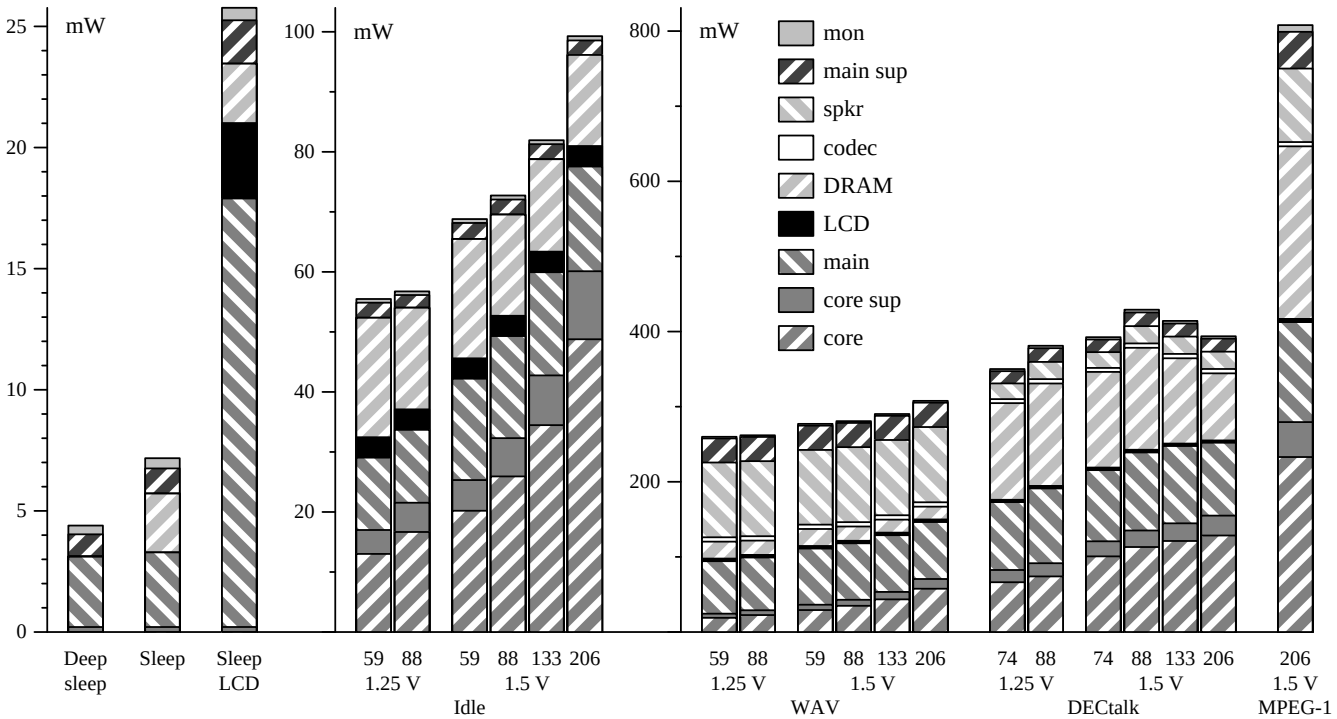

Figure 3. Average power breakdown of the Itsy computer (1 Itsy, 3.75 V power supply).

Benchmark	Freq. [MHz]	V_{core} [V]	Power [mW]	P_{mon}	$P_{main\ sup}$	P_{spkr}	P_{codec}	P_{DRAM}	P_{LCD}	P_{main}	$P_{core\ sup}$	P_{core}
Deep sleep	—	—	4.40	8 %	21 %	—	—	—	—	66 %	4.7 %	—
Sleep	—	—	7.18	6 %	14 %	—	—	34 %	—	43 %	2.9 %	—
Sleep, LCD	—	—	25.8	2 %	7 %	—	—	9.5 %	12 %	69 %	0.8 %	—
Idle	59	1.25	55.5	1 %	5 %	—	—	36 %	6 %	21.7 %	7.2 %	23.5 %
Idle	88	1.25	56.7	1 %	4 %	—	—	30 %	6 %	21.4 %	9 %	29.4 %
Idle	59	1.5	68.8	1 %	4 %	—	—	29 %	5 %	24.5 %	7 %	29.4 %
Idle	88	1.5	72.7	1 %	3 %	—	—	23.2 %	5 %	23.4 %	9 %	36 %
Idle	133	1.5	81.9	1 %	3 %	—	—	18.8 %	4.2 %	21.0 %	10 %	42 %
Idle	206	1.5	99.3	1 %	2 %	—	—	15.3 %	3.4 %	17.6 %	11 %	49 %
WAV	59	1.25	260	1 %	12 %	38.3 %	2.2 %	8.7 %	1.3 %	26.9 %	2.1 %	7.3 %
WAV	88	1.25	262	1 %	12 %	38.2 %	2.2 %	7.3 %	1.3 %	26.8 %	2.4 %	8.6 %
WAV	59	1.5	277	1 %	12 %	35.9 %	2.1 %	8.2 %	1.2 %	27.0 %	2.6 %	10.6 %
WAV	88	1.5	281	1 %	11 %	35.6 %	2.1 %	6.8 %	1.2 %	26.8 %	2.9 %	12.4 %
WAV	133	1.5	290	1 %	11 %	34.5 %	2.0 %	6.0 %	1.2 %	26.0 %	3.4 %	15.0 %
WAV	206	1.5	308	1 %	11 %	32.6 %	1.9 %	5.5 %	1.1 %	24.6 %	4.2 %	18.7 %
DECtalk	74	1.25	350	1 %	5 %	6.0 %	1.5 %	37 %	0.9 %	25.8 %	4.7 %	18.9 %
DECtalk	88	1.25	381	1 %	5 %	6.0 %	1.5 %	36 %	0.9 %	26.1 %	4.6 %	19.4 %
DECtalk	74	1.5	393	1 %	4 %	5.4 %	1.4 %	32 %	0.9 %	24.1 %	5.1 %	25.7 %
DECtalk	88	1.5	429	1 %	4 %	5.4 %	1.4 %	32 %	0.8 %	24.2 %	5.1 %	26.4 %
DECtalk	133	1.5	414	1 %	4 %	5.6 %	1.4 %	27 %	0.8 %	24.8 %	6 %	29 %
DECtalk	206	1.5	394	1 %	4 %	5.9 %	1.5 %	23 %	0.8 %	24.7 %	7 %	33 %
MPEG-1	206	1.5	808	1 %	6 %	12.1 %	0.7 %	28.4 %	0.5 %	16.5 %	5.8 %	28.8 %

Table 2. Relative average power breakdown of the Itsy computer (1 Itsy, 3.75 V power supply). Entries marked by a dash (—) are too small to be accurately measured by the instruments used. Percentages have been rounded to 1, 2, or 3 significant digits depending on the corresponding error. Due to this rounding, they do not always add up exactly to 100.

creasing the number of DRAM banks should not increase the system power, as long as the processor does not implement simultaneous accesses to multiple banks. However, this situation does not apply to sleep mode, where the cost of DRAM refresh is high. It is thus important to implement a mechanism to selectively unpower some of the banks. The monetary cost of DRAM and the size of their packages may also be important considerations.

5.2. Power management

Given a particular device, power management techniques aim to optimally use the fixed amount of energy stored in the battery. It is important to stress that the goal is to minimize the quantity of energy required to perform a given task. The power consumption must hence be weighted by the time it takes to perform this task. The problem of power management is also complicated by the non-ideal characteristics of batteries.

The significant variation of the core power at different voltages and frequencies offers an opportunity for energy savings, commonly referred to as voltage-scaling [5, 14, 16]. Other savings are suggested by the large difference in power between idle mode and sleep mode. Different projects in our laboratories are currently exploring both of these ideas using the Itsy as a platform.

5.3. Comparison with commercial handhelds

The Itsy is a representative test-bed for handheld power evaluation. For example, in a 1996 study [17], two PDAs were measured at 164 mW and 312 mW while idle. The same team also calculated that a PDA in "typical use" requires 700 – 1200 mW. These figures are slightly higher than those for the Itsy because they were taken on an earlier generation of hardware.

The Itsy also compares favorably to a more recent handheld. We measured near identical power in sleep mode (7 – 8 mW) on Compaq's one-year old iPAQ H36xx.[3] On the other hand, the idle-mode power at 206 MHz is approximately 250 mW instead of the 99 mW of the Itsy.

One of the reasons that the Itsy's idle mode takes less power than that of the iPAQ is that we chose a passive-matrix grey-scale LCD for the Itsy rather than a more power-hungry active-matrix color display. By taking differential measurements, S. Cho [1] determined that the iPAQ LCD uses about 39 mW, and that the LCD controller used an additional 88 mW.[4] The equivalent numbers for the Itsy, taking power-supply overhead into account (see Section 2.1), are 3.5 mW and 19 mW, respectively (while idle at 206 MHz). As expected, the power consumption of the screen itself is an order of magnitude higher. The factor of four in the power dissipated by the LCD controller can easily be explained by the fact that the iPAQ's framebuffer (12-bit pixels padded to 16 bits) is four times the size of the Itsy's (4-bit pixels). A color display would have at least doubled the Itsy's idle-mode power, and would have been a significant factor in the other benchmarks.

At full power, the Itsy backlight consumes 324 mW (343 mW including power supply overhead.) It is possible to modulate the backlight to decrease its intensity, which proportionally reduces the power consumption. Under PocketPC, the iPAQ frontlight can be set to four different settings, which use from 400 – 960 mW. Clearly, the power required for a front/backlight quickly becomes a dominant cost.

5.4. Useful additional peripherals

Other components may be necessary for some wearable applications. In particular, a wireless networking interface, hard drive, and head-mounted display seem particularly useful. Consider the power requirements of a few representative devices: an ORiNOCO IEEE 802.11b wireless interface PC Card (doze 45 mW, receive 925 mW, transmit 1425 mW) [11], an IBM Microdrive (standby 66 mW, write 825 mW) [8], and a MicroOptical head-mounted display (display and backlight 100 mW) [13]. These devices will rapidly increase the power consumption up to a factor of 2 – 3 over that of a low-power system such as the Itsy. This might require additional batteries, as, for example, is the case currently on the Compaq iPAQ PC Card Extension Pack.

Lower-power components are becoming available for proximity networking. For example, the Ericsson Bluetooth radio typically uses 140 mW to receive and 84 mW to transmit. It has also a lower-power standby mode [3].

6. Related work

We believe this work to be one of the most comprehensive power-breakdown studies for a handheld ever published. An extensive breakdown of power exists for several laptops in the Macintosh Powerbook Duo family [10]. Because the Duos were not designed for such a study, the authors had to rely on differential measurements and "estimates from an engineer at Apple Computer" to determine such important figures such as processor and display power.

Less comprehensive studies of handhelds have been published. Although it is not really a handheld, the LART embedded device is also based on StrongARM SA-1100

[3] We modified an iPAQ by adding a sense resistor in series with the battery, similar to the Itsy setup of Figure 1. These measurements were taken over a 30 s period with a partially-charged battery, and are thus somewhat imprecise. The iPAQ was running Microsoft's PocketPC operating system.

[4] These numbers were taken on an iPAQ running Linux, over a short period of time, with a partially-charged battery.

processor and thus has similar power characteristics to an Itsy. It has been instrumented [15, 16]. However, because the designers only included three sense resistors, they can only separate the system into three power domains, and are thus greatly limited as to what they can directly measure. Our colleagues developed power usage profiles for an earlier version of the Itsy by running micro-benchmarks and measuring overall system power [4]. They estimated measurement errors of approximately $\pm 5\,\mathrm{mW}$, which is much larger than the total power usage of many components. Finally, C. Ellis performed system-level measurements on a Palm Pilot to obtain overall power usage for certain activities [2].

7. Conclusion

This paper made several contributions. First, we measured the battery lifetime of the Itsy for different real-world workloads; such studies are time-consuming and are rarely performed. We then measured the breakdown among various system components for each workload. Since the Itsy is a realistic handheld computer, these findings have implications for the low-power design and power management of many similar handheld and wearable devices.

Because we built the Itsy as a research platform, it is an ideal testbed for power studies. We placed a sense resistor at every natural power boundary, but did not separate any power planes for the sole sake of power monitoring. At least one such division would have been useful, namely to isolate the 3 V processors I/Os from the rest of the 3 V digital logic. This would have provided a better understanding of the processor power consumption. It would also have been useful for debug. Since the StrongARM SA-1100 processor has fifty 3 V pins and since the power input to a processor should be extremely stable, it was not possible to add such a feature later without re-manufacturing the printed-circuit board.

An important result of this work is a deeper understanding of why the relationship between frequency and power is not intuitive. We conclude that measuring a system's power is crucial to understanding it. Therefore, we believe that on-board power evaluation capability is crucial to let system software manage a battery's energy optimally. On the Itsy, four of the sense resistors can be monitored by the processor including R_{batt}, $R_{\mathrm{main\,in}}$, and $R_{\mathrm{core\,in}}$.

Acknowledgements

The Itsy project was led by W. Hamburgen, who co-designed the hardware with one of the authors (M. Viredaz). The Linux operating system was ported by L. Brakmo, C. Waldspurger, and the second author (D. Wallach). Many other members of the *Western Research Laboratory (WRL)* and the *System Research Center (SRC)* made significant contributions to the project. The authors would also like to acknowledge the enthusiastic support of their management. Feedback from P. Ranganathan significantly improved the quality of this paper.

References

[1] S. Cho. Experiment result about power and to do list, 2001. http://www.handhelds.org/pipermail/ipaq/2001-February/003962.html.

[2] C. S. Ellis. The case for higher-level power management. In *Workshop on Hot Topics in Operating Systems*, Rio Rico, AZ, 1999.

[3] Ericsson Microelectronics. *Bluetooth™ Radio*, 2000. Document No. EN/LZT 146 58 R1A.

[4] K. I. Farkas et al. Quantifying the energy consumption of a pocket computer and a Java virtual machine. In *ACM SIGMETRICS*, Santa Clara, CA, 2000.

[5] K. Flautner et al. Automatic performance-setting for dynamic voltage scaling, 2001. http://www-personal.engin.umich.edu/~manowar/publications/automatic-performance-scaling.pdf.

[6] W. R. Hamburgen et al. Itsy: Stretching the bounds of mobile computing. *Computer*, 34(4):28 – 36, 2001.

[7] Hewlett-Packard. *HP 34401A Multimeter: User's Guide*, 4th edition, 1996. Manual No. 34401-90004.

[8] IBM. *IBM family of Microdrives*, 2000. Document No. G225-6801-02.

[9] Intel. *Intel® StrongARM® SA-1100 Microprocessor: Developer's Manual*, 1999. Document No. 278088-004.

[10] J. R. Lorch and A. J. Smith. Apple Macintosh's energy consumption. *IEEE Micro*, 18(6):54 – 63, 1998.

[11] Lucent Technologies. *ORiNOCO™ PC Card*, 2000. Document No. 6205 Issue 3.

[12] T. L. Martin and D. P. Siewiorek. The impact of battery capacity and memory bandwidth on CPU speed-setting: A case study. In *International Symposium on Low Power Electronics and Design*, pages 200 – 205, San Diego, CA, 1999.

[13] MicroOptical. *Product Specifications*, 2001. http://www.microopticalcorp.com/Products/specifications.html.

[14] T. Pering et al. The simulation and evaluation of dynamic voltage scaling algorithms. In *International Symposium on Low Power Electronics and Design*, Monterey, CA, 1998.

[15] J. Pouwelse et al. Power consumption trade-offs for wireless audio access. In *International Workshop on Mobile Multimedia Communications*, Tokyo, 2000.

[16] J. Pouwelse et al. Dynamic voltage scaling on a low-power microprocessor. In *International Symposium on Mobile Multimedia Systems & Applications*, Delft, 2000.

[17] M. Stemm and R. H. Katz. Measuring and reducing energy consumption of network interfaces in hand-held devices. *IEICE Transactions on Communications*, E80B(8):1125 – 1131, 1997.

[18] M. A. Viredaz and D. A. Wallach. Power evaluation of Itsy version 2.3. TN-57, WRL, Compaq, Palo Alto, CA, 2000.

[19] M. A. Viredaz and D. A. Wallach. Power evaluation of Itsy version 2.4. TN-59, WRL, Compaq, Palo Alto, CA, 2001.

A. Addendum to *Power Evaluation of Itsy Version 2.4*

In the Technical Note *Power Evaluation of Itsy Version 2.4* [19], the total power did not include the power dissipated by the sense resistor. As mentioned in Section 4, the average power $P_{\text{batt avg}}$ reported in Table 1 is based on the same data, but has been re-calculated to account for the sense-resistor power.

This appendix presents the modifications made to the power calculation and to the error analysis, as well as the resulting values. In this appendix, the same notation is used as in the Technical Note [19]. The quantities V, V_R, I, and P are referred to as V_{in}, $V_{R_{\text{batt}}}$, I_{batt}, and P_{batt} elsewhere in this document.

First, the approximation $\widetilde{P}_{\text{avg},\,a}$ of the average power $P_{\text{avg},\,a}$ for each acquisition a (formerly given by Equation (2) of [19]) is redefined as:

$$\widetilde{P}_{\text{avg},\,a} = (V_{\text{avg},\,a} + V_{R\,\text{avg},\,a}) \cdot I_{\text{avg},\,a} \tag{1}$$

The average power P_{avg} over the battery lifetime is then calculated identically (as given by Equation (5) of [19]) using this new definition. Similarly, the lower and upper bounds (formerly given by Equations (3) and (4) of [19]) are redefined as:

$$P_{\text{low bnd},\,a} = (V_{\text{min},\,a} + V_{R\,\text{min},\,a}) \cdot I_{\text{min},\,a} \tag{2}$$

$$P_{\text{up bnd},\,a} = (V_{\text{max},\,a} + V_{R\,\text{max},\,a}) \cdot I_{\text{max},\,a} \tag{3}$$

The error analysis is then adjusted. The relative error on the average power $\widetilde{P}_{\text{avg},\,a}$ for each acquisition a (formerly given by Equation (14) of [19]) is now equal to:

$$\varepsilon_{\widetilde{P}_{\text{avg},\,a}} \approx \varepsilon_R + \frac{\varepsilon_{V_{\text{avg},\,a}} \cdot V_{\text{avg},\,a} + \varepsilon_{V_{R\,\text{avg},\,a}} \cdot V_{R\,\text{avg},\,a}}{V_{\text{avg},\,a} + V_{R\,\text{avg},\,a}} + \varepsilon_{V_{R\,\text{avg},\,a}} + \varepsilon_{\text{avg},\,a} \tag{4}$$

where the averaging error $\varepsilon_{\text{avg},\,a}$ (formerly given by Equation (12) of [19]) is now defined as:

$$\varepsilon_{\text{avg},\,a} = \frac{1}{\widetilde{P}_{\text{avg},\,a}} \cdot \frac{N-1}{2 \cdot N} \cdot (V_{\text{max},\,a} + V_{R\,\text{max},\,a} - V_{\text{min},\,a} - V_{R\,\text{min},\,a}) \cdot (I_{\text{max},\,a} - I_{\text{min},\,a}) \tag{5}$$

The rest of the error analysis (for both the average power P_{avg} and the battery lifetime t_{batt}) remains identical given the new definitions of Equations (1) to (5) above.

Tables 3 – 17 present the average power P_{avg}, its lower and upper bounds $P_{\text{low bnd}}$ and $P_{\text{up bnd}}$, the battery lifetime t_{batt}, and the battery capacity $P_{\text{avg}} \cdot t_{\text{batt}}$ for all experiments, taking the power dissipated by the sense resistor R into account.

Itsy no.	Batt. no.	P_{avg} [mW]	$\varepsilon_{P_{\text{avg}}}$	$P_{\text{low bnd}}$ [mW]	$P_{\text{up bnd}}$ [mW]	t_{batt} [h]	$\varepsilon_{t_{\text{batt}}}$	$P_{\text{avg}} \cdot t_{\text{batt}}$ [W · h]
34	21	4.45	4.2 %	−0.78	206	514.5	0.23 %	2.29
35	17	4.47	4.2 %	2.22	216	505.5	0.23 %	2.26
36	11	4.82	4.0 %	3.05	222	479.5	0.22 %	2.31

Table 3. Benchmark results: deep sleep.

Itsy no.	Batt. no.	P_{avg} [mW]	$\varepsilon_{P_{\text{avg}}}$	$P_{\text{low bnd}}$ [mW]	$P_{\text{up bnd}}$ [mW]	t_{batt} [h]	$\varepsilon_{t_{\text{batt}}}$	$P_{\text{avg}} \cdot t_{\text{batt}}$ [W · h]
34	21	7.19	3.0 %	5.92	207	318.5	0.24 %	2.29
35	17	7.46	3.0 %	5.20	217	302.5	0.24 %	2.26
36	11	7.56	2.9 %	5.78	221	304.5	0.24 %	2.30

Table 4. Benchmark results: sleep.

Itsy no.	Batt. no.	P_{avg} [mW]	$\varepsilon_{P_{\text{avg}}}$	$P_{\text{low bnd}}$ [mW]	$P_{\text{up bnd}}$ [mW]	t_{batt} [h]	$\varepsilon_{t_{\text{batt}}}$	$P_{\text{avg}} \cdot t_{\text{batt}}$ [W · h]
34	21	10.5	2.4 %	8.69	228	218.5	0.29 %	2.29
35	17	10.6	2.4 %	8.46	239	211.5	0.29 %	2.23
36	11	10.6	2.4 %	8.88	245	214.5	0.29 %	2.28

Table 5. Benchmark results: sleep, daughter-card (DC).

Itsy no.	Batt. no.	P_{avg} [mW]	$\varepsilon_{P_{\text{avg}}}$	$P_{\text{low bnd}}$ [mW]	$P_{\text{up bnd}}$ [mW]	t_{batt} [h]	$\varepsilon_{t_{\text{batt}}}$	$P_{\text{avg}} \cdot t_{\text{batt}}$ [W · h]
34	21	25.9	1.6 %	24.4	214	88.5	0.59 %	2.29
35	17	26.3	1.6 %	23.9	237	85.5	0.61 %	2.25
36	11	26.3	1.6 %	24.4	239	86.5	0.60 %	2.28

Table 6. Benchmark results: sleep, LCD.

Itsy no.	Batt. no.	P_{avg} [mW]	$\varepsilon_{P_{\text{avg}}}$	$P_{\text{low bnd}}$ [mW]	$P_{\text{up bnd}}$ [mW]	t_{batt} [h]	$\varepsilon_{t_{\text{batt}}}$	$P_{\text{avg}} \cdot t_{\text{batt}}$ [W · h]
34	21	54.5	2.0 %	50.7	373	41.8	0.45 %	2.28
35	17	57.0	2.0 %	52.4	396	38.8	0.45 %	2.21
36	11	54.7	2.0 %	50.5	378	41.1	0.45 %	2.25

Table 7. Benchmark results: idle, 59.0 MHz, low voltage (LV).

Itsy no.	Batt. no.	P_{avg} [mW]	$\varepsilon_{P_{\text{avg}}}$	$P_{\text{low bnd}}$ [mW]	$P_{\text{up bnd}}$ [mW]	t_{batt} [h]	$\varepsilon_{t_{\text{batt}}}$	$P_{\text{avg}} \cdot t_{\text{batt}}$ [W · h]
34	21	67.7	1.9 %	63.1	413	33.6	0.45 %	2.28
35	17	72.9	1.8 %	67.3	419	30.3	0.46 %	2.21
36	11	68.1	1.9 %	62.9	418	33.1	0.45 %	2.26

Table 8. Benchmark results: idle, 59.0 MHz.

Itsy no.	Batt. no.	P_{avg} [mW]	$\varepsilon_{P_{\text{avg}}}$	$P_{\text{low bnd}}$ [mW]	$P_{\text{up bnd}}$ [mW]	t_{batt} [h]	$\varepsilon_{t_{\text{batt}}}$	$P_{\text{avg}} \cdot t_{\text{batt}}$ [W · h]
34	21	80.8	1.8 %	75.3	595	28.1	0.47 %	2.27
35	17	86.6	1.8 %	80.1	612	25.4	0.49 %	2.20
36	11	81.7	1.8 %	76.0	605	27.4	0.47 %	2.24

Table 9. Benchmark results: idle, 132.7 MHz.

Itsy no.	Batt. no.	P_{avg} [mW]	$\varepsilon_{P_{\text{avg}}}$	$P_{\text{low bnd}}$ [mW]	$P_{\text{up bnd}}$ [mW]	t_{batt} [h]	$\varepsilon_{t_{\text{batt}}}$	$P_{\text{avg}} \cdot t_{\text{batt}}$ [W · h]
34	21	99	1.8 %	92	704	22.8	0.51 %	2.26
35	17	105	1.8 %	98	718	20.8	0.53 %	2.19
36	11	99	1.8 %	93	722	22.4	0.51 %	2.23

Table 10. Benchmark results: idle, 206.4 MHz.

Itsy no.	Batt. no.	P_{avg} [mW]	$\varepsilon_{P_{\text{avg}}}$	$P_{\text{low bnd}}$ [mW]	$P_{\text{up bnd}}$ [mW]	t_{batt} [h]	$\varepsilon_{t_{\text{batt}}}$	$P_{\text{avg}} \cdot t_{\text{batt}}$ [W · h]
34	21	276	1.9 %	145	641	7.96	0.56 %	2.20
35	17	283	1.9 %	149	674	7.47	0.58 %	2.12
36	11	276	1.9 %	146	667	7.82	0.57 %	2.16

Table 11. Benchmark results: WAV, 59.0 MHz.

Itsy no.	Batt. no.	P_{avg} [mW]	$\varepsilon_{P_{\text{avg}}}$	$P_{\text{low bnd}}$ [mW]	$P_{\text{up bnd}}$ [mW]	t_{batt} [h]	$\varepsilon_{t_{\text{batt}}}$	$P_{\text{avg}} \cdot t_{\text{batt}}$ [W · h]
34	21	309	2.6 %	174	970	7.04	0.60 %	2.17
35	17	316	2.6 %	180	996	6.62	0.63 %	2.09
36	11	308	2.6 %	175	987	6.97	0.61 %	2.15

Table 12. Benchmark results: WAV, 206.4 MHz.

Itsy no.	Batt. no.	P_{avg} [mW]	$\varepsilon_{P_{\text{avg}}}$	$P_{\text{low bnd}}$ [mW]	$P_{\text{up bnd}}$ [mW]	t_{batt} [h]	$\varepsilon_{t_{\text{batt}}}$	$P_{\text{avg}} \cdot t_{\text{batt}}$ [W · h]
34	21	351	1.9 %	51.8	573	6.24	0.55 %	2.19
35	17	356	1.9 %	53.3	640	5.97	0.57 %	2.12
36	11	353	1.9 %	51.1	600	6.13	0.56 %	2.17

Table 13. Benchmark results: DECtalk, 73.7 MHz, low voltage (LV).

Itsy no.	Batt. no.	P_{avg} [mW]	$\varepsilon_{P_{\text{avg}}}$	$P_{\text{low bnd}}$ [mW]	$P_{\text{up bnd}}$ [mW]	t_{batt} [h]	$\varepsilon_{t_{\text{batt}}}$	$P_{\text{avg}} \cdot t_{\text{batt}}$ [W · h]
34	21	394	1.7 %	65.4	629	5.47	0.60 %	2.16
35	17	403	1.7 %	70.2	637	5.20	0.63 %	2.10
36	11	398	1.7 %	65.4	648	5.37	0.61 %	2.14

Table 14. Benchmark results: DECtalk, 73.7 MHz.

Itsy no.	Batt. no.	P_{avg} [mW]	$\varepsilon_{P_{\text{avg}}}$	$P_{\text{low bnd}}$ [mW]	$P_{\text{up bnd}}$ [mW]	t_{batt} [h]	$\varepsilon_{t_{\text{batt}}}$	$P_{\text{avg}} \cdot t_{\text{batt}}$ [W · h]
34	21	398	3.2 %	92	946	5.45	0.60 %	2.17
35	17	406	3.2 %	97	973	5.13	0.63 %	2.08
36	11	403	3.2 %	91	950	5.29	0.62 %	2.13

Table 15. Benchmark results: DECtalk, 206.4 MHz.

Itsy no.	Batt. no.	P_{avg} [mW]	$\varepsilon_{P_{\text{avg}}}$	$P_{\text{low bnd}}$ [mW]	$P_{\text{up bnd}}$ [mW]	t_{batt} [h]	$\varepsilon_{t_{\text{batt}}}$	$P_{\text{avg}} \cdot t_{\text{batt}}$ [W · h]
34	21	754	3.2 %	100	1240	2.75	0.62 %	2.07
35	17	767	3.3 %	107	1260	2.61	0.65 %	2.00
36	11	765	3.3 %	100	1270	2.66	0.64 %	2.04

Table 16. Benchmark results: dictation, daughter-card (DC), 206.4 MHz.

Itsy no.	Batt. no.	P_{avg} [mW]	$\varepsilon_{P_{\text{avg}}}$	$P_{\text{low bnd}}$ [mW]	$P_{\text{up bnd}}$ [mW]	t_{batt} [h]	$\varepsilon_{t_{\text{batt}}}$	$P_{\text{avg}} \cdot t_{\text{batt}}$ [W · h]
34	21	818	4.0 %	223	1390	2.50	0.61 %	2.04
35	17	835	4.1 %	230	1410	2.35	0.64 %	1.96
36	11	826	4.2 %	223	1400	2.42	0.63 %	2.00

Table 17. Benchmark results: MPEG-1, 206.4 MHz.

B. Power breakdown

The power corresponding to the current flowing through the seven sense resistors shown in Figure 2 is calculated directly from the measured data. A common analysis is presented here. The symbols P, V, V_R, I, and R should be replaced by the appropriate quantities as defined by Table 18. Derived symbols, like $\widetilde{P}_{\text{avg}}$, V_{min}, I_{max}, etc., should be similarly replaced by the corresponding values. All voltages are directly measured, except the battery voltage V_{batt} defined as:

$$V_{\text{batt}} = V_{\text{in}} + V_{R_{\text{batt}}} \tag{6}$$

Currents are calculated from the corresponding voltage drops across sense resistors, using Ohm's law: $I = V_R/R$. For each acquisition a, an approximation $\widetilde{P}_{\text{avg},\,a}$ of the average power $P_{\text{avg},\,a}$ is calculated as:

$$\widetilde{P}_{\text{avg},\,a} = V_{\text{avg},\,a} \cdot I_{\text{avg},\,a} \tag{7}$$

Finally, the average power P_{avg} during an experiment is the time-weighted mean of all the acquisitions:

$$P_{\text{avg}} \approx \frac{\sum_{a=1}^{M} t_{\text{acq},\,a} \cdot \widetilde{P}_{\text{avg},\,a}}{\sum_{a=1}^{M} t_{\text{acq},\,a}} \tag{8}$$

where M is the number of acquisitions and $t_{\text{acq},\,a}$ is the duration of acquisition a.

Two of the nine elementary power domains are directly measured: the DRAM power $P_{\text{DRAM avg}}$ and the core power $P_{\text{core avg}}$. Another two, the codec power $P_{\text{codec avg}}$ and the main power $P_{\text{main avg}}$, are derived by measuring the analog power $P_{\text{analog avg}}$ with the speaker disconnected and the digital power $P_{\text{digital avg}}$ with the LCD disconnected, respectively. The remaining one are calculated as:

$$P_{\text{mon avg}} = P_{\text{batt avg}} - P_{\text{core in avg}} - P_{\text{main in avg}} \tag{9}$$

$$P_{\text{main sup avg}} = P_{\text{main in avg}} - P_{\text{digital avg}} - P_{\text{DRAM avg}} \tag{10}$$

$$P_{\text{spkr avg}} = P_{\text{analog avg}} - P_{\text{codec avg}} \tag{11}$$

$$P_{\text{LCD avg}} = P_{\text{digital avg}} - P_{\text{main avg}} \tag{12}$$

$$P_{\text{core sup avg}} = P_{\text{core in avg}} - P_{\text{core avg}} \tag{13}$$

Power P	Voltage V	Res. voltage V_R	Current I	Resistor R
P_{batt}	V_{batt}	$V_{R_{\text{batt}}}$	I_{batt}	$R_{\text{batt}} = 100\,\text{m}\Omega$
$P_{\text{main in}}$	V_{in}	$V_{R_{\text{main in}}}$	$I_{\text{main in}}$	$R_{\text{main in}} = 100\,\text{m}\Omega$
P_{analog}	V_{analog}	$V_{R_{\text{analog}}}$	I_{analog}	$R_{\text{analog}} = 560\,\text{m}\Omega$
P_{DRAM}	V_{digital}	$V_{R_{\text{DRAM}}}$	I_{DRAM}	$R_{\text{DRAM}} = 100\,\text{m}\Omega$
P_{digital}	V_{digital}	$V_{R_{\text{digital}}}$	I_{digital}	$R_{\text{digital}} = 100\,\text{m}\Omega$
$P_{\text{core in}}$	V_{in}	$V_{R_{\text{core in}}}$	$I_{\text{core in}}$	$R_{\text{core in}} = 560\,\text{m}\Omega$
P_{core}	V_{core}	$V_{R_{\text{core}}}$	I_{core}	$R_{\text{core}} = 100\,\text{m}\Omega$

Table 18. Quantities used to calculate the power corresponding to the sense resistors.

B.1. Error analysis

The error analysis for the power-breakdown measurements can be directly derived from that for battery-lifetime experiments (see appendix A). The relative error is equal to:

$$\varepsilon_{P_{\text{avg}}} \approx \frac{1}{|P_{\text{avg}}|} \cdot \frac{\sum_{a=1}^{M} t_{\text{acq},\,a} \cdot \left(\varepsilon_R + \varepsilon_{V_{\text{avg},\,a}} + \varepsilon_{V_{R\,\text{avg},\,a}} + \varepsilon_{\text{avg},\,a}\right) \cdot \left|\widetilde{P}_{\text{avg},\,a}\right|}{\sum_{a=1}^{M} t_{\text{acq},\,a}} \tag{14}$$

The individual error terms are equal to:

$$\varepsilon_R = 1\,\% \tag{15}$$

$$\varepsilon_{V_{\text{avg},\,a}} = \frac{50\,\mu\text{V}}{|V_{\text{avg},\,a}|} + 0.0035\,\% \tag{16}$$

$$\varepsilon_{V_{R\,\text{avg},\,a}} = \frac{3.5\,\mu\text{V}}{|V_{R\,\text{avg},\,a}|} + 0.0050\,\% \tag{17}$$

$$\varepsilon_{\text{avg},\,a} = \frac{N-1}{2 \cdot N} \cdot \frac{(V_{\text{max},\,a} - V_{\text{min},\,a}) \cdot (I_{\text{max},\,a} - I_{\text{min},\,a})}{|\widetilde{P}_{\text{avg},\,a}|} \tag{18}$$

except for the battery power, where the error on the average battery voltage $V_{\text{batt avg},\,a}$ is equal to:

$$\varepsilon_{V_{\text{avg},\,a}} = \varepsilon_{V_{\text{batt avg},\,a}} = \frac{53.5\,\mu\text{V} + 0.0035\,\% \cdot |V_{\text{in avg},\,a}| + 0.0050\,\% \cdot |V_{R_{\text{batt}}\,\text{avg},\,a}|}{|V_{\text{in avg},\,a} + V_{R_{\text{batt}}\,\text{avg},\,a}|} \tag{19}$$

In some cases, measured voltages are close to zero, and noise may result in the measurement of a negative voltage. The absolute values in Equations (14) to (19) ensure that the error is correctly calculated.

The absolute error on the elementary power domains, given by Equations (9) to (13), is simply the sum of the absolute error of the terms used in the subtraction.

C. Multimeter configuration for the power-breakdown experiments

The following listings are the commands used to configure each of the HP 34401A multimeters [7] during the power-breakdown experiments. The commands are in *Standard Commands for Programmable Instruments (SCPI)* format. The *initialization* section is sent once at the beginning of the experiment, while the *acquisition* section is sent for each acquisition. The voltages to be measures are divided in three groups:

- V_{in}, $V_{R_{\text{batt}}}$, $V_{R_{\text{main in}}}$, and $V_{R_{\text{core in}}}$.
- V_{digital}, $V_{R_{\text{DRAM}}}$, and $V_{R_{\text{digital}}}$.
- V_{analog}, $V_{R_{\text{analog}}}$, V_{core}, and $V_{R_{\text{core}}}$.

Within each group, the multimeters are operated synchronously.

Initialization

```
SYSTEM:REMOTE
*RST
*CLS
SYSTEM:BEEPER:STATE OFF
*IDN?
SYSTEM:VERSION?
FUNCTION "VOLTAGE:DC"
VOLTAGE:DC:RANGE:AUTO ON
VOLTAGE:DC:NPLCYCLES 0.2
INPUT:IMPEDANCE:AUTO ON
CALCULATE:FUNCTION AVERAGE
DATA:FEED RDG_STORE, ""
TRIGGER:SOURCE IMMEDIATE
TRIGGER:DELAY MINIMUM
TRIGGER:COUNT 1
SAMPLE:COUNT 150
```

Acquisition

```
ZERO:AUTO ONCE
CALCULATE:STATE ON
INITIATE ; CALCULATE:AVERAGE:AVERAGE?
CALCULATE:AVERAGE:MINIMUM?
CALCULATE:AVERAGE:MAXIMUM?
CALCULATE:STATE OFF
```

D. Complete results for the power-breakdown experiments

Benchmark	Freq. [MHz]	V_{core} [V]	P_{batt} [mW]	$\varepsilon_{P_{batt}}$	$P_{main\ in}$ [mW]	$\varepsilon_{P_{main\ in}}$	P_{analog} [mW]	$\varepsilon_{P_{analog}}$	P_{DRAM} [mW]	$\varepsilon_{P_{DRAM}}$	$P_{digital}$ [mW]	$\varepsilon_{P_{digital}}$	$P_{core\ in}$ [mW]	$\varepsilon_{P_{core\ in}}$	P_{core} [mW]	$\varepsilon_{P_{core}}$
Deep sleep	—	—	4.40	4.0 %	3.83	4.5 %	—	—	—	—	2.91	4.8 %	0.21	12.4 %	—	—
Sleep	—	—	7.18	2.9 %	6.55	3.1 %	—	—	2.43	5.5 %	3.08	4.6 %	0.21	12.4 %	—	—
Sleep, LCD	—	—	25.8	1.6 %	25.0	1.6 %	—	—	2.45	5.5 %	20.8	1.6 %	0.21	12.3 %	—	—
Idle	59	1.25	55.5	1.7 %	37.9	1.7 %	—	—	19.9	2.3 %	15.5	1.9 %	17.0	1.4 %	13.0	1.4 %
Idle	74	1.25	56.0	1.7 %	36.0	1.7 %	—	—	18.1	2.4 %	15.5	2.0 %	19.3	1.4 %	14.8	1.4 %
Idle	88	1.25	56.7	1.5 %	34.6	1.6 %	—	—	16.9	2.6 %	15.6	2.0 %	21.5	1.3 %	16.7	1.4 %
Idle	59	1.5	68.8	1.6 %	42.8	1.6 %	—	—	19.9	2.3 %	20.3	1.7 %	25.3	1.4 %	20.2	1.5 %
Idle	74	1.5	70.3	1.6 %	40.9	1.6 %	—	—	18.0	2.5 %	20.3	1.8 %	28.8	1.3 %	23.1	1.5 %
Idle	88	1.5	72.7	1.6 %	39.8	1.7 %	—	—	16.9	2.6 %	20.4	1.8 %	32.3	1.4 %	25.9	1.5 %
Idle	103	1.5	75.7	1.6 %	39.2	1.7 %	—	—	16.2	2.6 %	20.5	1.8 %	35.8	1.3 %	28.9	1.5 %
Idle	118	1.5	78.9	1.6 %	39.0	1.7 %	—	—	16.0	2.6 %	20.6	1.8 %	39.2	1.3 %	31.6	1.5 %
Idle	133	1.5	81.9	1.6 %	38.5	1.7 %	—	—	15.4	2.7 %	20.6	1.8 %	42.8	1.3 %	34.5	1.5 %
Idle	147	1.5	84.9	1.6 %	38.1	1.7 %	—	—	15.0	2.7 %	20.7	1.8 %	46.2	1.3 %	37.3	1.5 %
Idle	162	1.5	88.8	1.5 %	38.4	1.7 %	—	—	15.2	2.7 %	20.7	1.8 %	49.8	1.3 %	40.2	1.4 %
Idle	177	1.5	92.2	1.5 %	38.4	1.7 %	—	—	15.2	2.7 %	20.7	1.8 %	53.1	1.2 %	43.0	1.4 %
Idle	192	1.5	95.5	1.5 %	38.1	1.7 %	—	—	14.8	2.7 %	20.8	1.8 %	56.7	1.2 %	46.0	1.4 %
Idle	206	1.5	99.3	1.5 %	38.4	1.7 %	—	—	15.2	2.7 %	20.9	1.8 %	60.1	1.2 %	48.8	1.4 %
WAV	59	1.25	260	1.3 %	233	1.2 %	105	1.1 %	22.5	2.9 %	73.3	1.3 %	24.4	1.4 %	18.9	1.3 %
WAV	74	1.25	261	1.3 %	232	1.3 %	106	1.1 %	20.4	3.1 %	73.5	1.3 %	26.7	1.4 %	20.8	1.3 %
WAV	88	1.25	262	1.3 %	231	1.3 %	106	1.1 %	19.1	3.3 %	73.7	1.3 %	29.0	1.4 %	22.6	1.4 %
WAV	59	1.5	277	1.3 %	238	1.3 %	105	1.1 %	22.6	2.9 %	78.2	1.3 %	36.4	1.4 %	29.3	1.4 %
WAV	74	1.5	278	1.3 %	237	1.3 %	106	1.1 %	20.4	3.2 %	78.4	1.3 %	39.6	1.4 %	32.1	1.5 %
WAV	88	1.5	281	1.3 %	235	1.3 %	106	1.1 %	19.0	3.4 %	78.5	1.3 %	42.9	1.4 %	34.9	1.5 %
WAV	103	1.5	284	1.3 %	235	1.3 %	106	1.1 %	18.3	3.4 %	78.8	1.3 %	46.7	1.4 %	37.9	1.5 %
WAV	118	1.5	287	1.3 %	235	1.3 %	106	1.1 %	18.0	3.5 %	78.9	1.3 %	49.8	1.4 %	40.5	1.5 %
WAV	133	1.5	290	1.4 %	234	1.3 %	106	1.1 %	17.3	3.6 %	78.9	1.3 %	53.4	1.4 %	43.5	1.5 %
WAV	147	1.5	293	1.3 %	234	1.3 %	106	1.1 %	16.7	3.6 %	79.0	1.3 %	56.8	1.3 %	46.3	1.5 %
WAV	162	1.5	297	1.3 %	234	1.3 %	106	1.1 %	17.1	3.6 %	79.1	1.3 %	60.4	1.3 %	49.2	1.5 %
WAV	177	1.5	300	1.4 %	234	1.3 %	106	1.1 %	17.0	3.6 %	79.1	1.3 %	63.5	1.3 %	51.8	1.5 %
WAV	192	1.5	304	1.3 %	234	1.3 %	106	1.1 %	16.6	3.7 %	79.2	1.3 %	67.1	1.3 %	54.8	1.5 %
WAV	206	1.5	308	1.4 %	235	1.3 %	106	1.1 %	17.0	3.7 %	79.2	1.3 %	70.6	1.3 %	57.6	1.4 %
DECtalk	74	1.25	350	1.3 %	265	1.4 %	26.2	1.4 %	129	1.9 %	93.4	1.6 %	82.6	1.3 %	66.3	1.2 %
DECtalk	88	1.25	381	1.3 %	286	1.4 %	28.7	1.3 %	136	2.0 %	103	1.4 %	91.6	1.3 %	74.0	1.6 %
DECtalk	74	1.5	393	1.2 %	269	1.3 %	26.3	1.4 %	127	1.9 %	98.2	1.6 %	121	1.2 %	101	1.6 %
DECtalk	88	1.5	429	1.3 %	290	1.3 %	28.8	1.3 %	136	2.0 %	107	1.4 %	135	1.3 %	113	1.7 %
DECtalk	103	1.5	426	1.6 %	282	1.5 %	28.8	1.3 %	127	2.3 %	107	1.5 %	140	1.6 %	117	1.9 %
DECtalk	118	1.5	412	1.7 %	267	1.6 %	28.9	1.3 %	116	2.5 %	105	1.6 %	140	1.7 %	117	2.1 %
DECtalk	133	1.5	414	1.8 %	266	1.7 %	28.9	1.3 %	114	2.7 %	106	1.6 %	145	1.8 %	121	2.2 %
DECtalk	147	1.5	427	1.8 %	273	1.7 %	29.0	1.3 %	117	2.7 %	108	1.7 %	151	1.8 %	126	2.2 %
DECtalk	162	1.5	424	1.8 %	269	1.7 %	29.0	1.3 %	115	2.8 %	107	1.7 %	153	1.9 %	128	2.4 %
DECtalk	177	1.5	407	1.9 %	251	1.8 %	28.8	1.3 %	101	3.1 %	103	1.7 %	152	2.1 %	126	2.7 %
DECtalk	192	1.5	410	2.0 %	250	1.9 %	28.9	1.3 %	99.0	3.2 %	104	1.7 %	156	2.2 %	130	2.8 %
DECtalk	206	1.5	394	2.1 %	236	1.9 %	28.9	1.3 %	89.3	3.5 %	100	1.8 %	155	2.4 %	128	3.1 %
MPEG-1	192	1.5	800	1.5 %	522	1.5 %	104	1.1 %	231	1.9 %	138	1.5 %	269	1.4 %	225	1.2 %
MPEG-1	206	1.5	808	1.5 %	520	1.5 %	104	1.1 %	230	1.8 %	137	1.5 %	279	1.4 %	233	1.2 %

Table 19. Measured average power for a complete Itsy (Itsy no. 34, 3.75 V power supply).

Benchmark	Freq. [MHz]	V_{core} [V]	P_{batt} [mW]	$\varepsilon_{P_{\text{batt}}}$	$P_{\text{main in}}$ [mW]	$\varepsilon_{P_{\text{main in}}}$	P_{analog} [mW]	$\varepsilon_{P_{\text{analog}}}$	P_{DRAM} [mW]	$\varepsilon_{P_{\text{DRAM}}}$	P_{digital} [mW]	$\varepsilon_{P_{\text{digital}}}$	$P_{\text{core in}}$ [mW]	$\varepsilon_{P_{\text{core in}}}$	P_{core} [mW]	$\varepsilon_{P_{\text{core}}}$
Deep sleep	—	—	4.39	4.0 %	3.83	4.5 %	—	—	—	—	2.90	4.8 %	0.21	12.4 %	—	—
Sleep	—	—	7.16	2.9 %	6.57	3.1 %	—	—	2.44	5.5 %	3.09	4.5 %	0.21	12.4 %	—	—
Sleep, LCD	—	—	25.8	1.6 %	25.1	1.6 %	—	—	2.46	5.4 %	20.8	1.6 %	0.21	12.4 %	—	—
Idle	59	1.25	55.5	1.7 %	37.9	1.7 %	—	—	19.9	2.3 %	15.4	1.9 %	17.0	1.4 %	13.0	1.4 %
Idle	74	1.25	56.0	1.7 %	36.1	1.8 %	—	—	18.1	2.5 %	15.5	2.0 %	19.3	1.4 %	14.8	1.4 %
Idle	88	1.25	57.0	1.7 %	34.8	1.7 %	—	—	16.9	2.6 %	15.5	2.0 %	21.6	1.4 %	16.7	1.4 %
Idle	59	1.5	68.8	1.6 %	42.8	1.6 %	—	—	19.9	2.3 %	20.3	1.7 %	25.3	1.4 %	20.2	1.5 %
Idle	74	1.5	70.4	1.6 %	40.9	1.6 %	—	—	18.1	2.5 %	20.3	1.8 %	28.8	1.3 %	23.1	1.5 %
Idle	88	1.5	72.7	1.6 %	39.8	1.7 %	—	—	16.9	2.6 %	20.4	1.8 %	32.3	1.3 %	25.9	1.5 %
Idle	103	1.5	75.9	1.6 %	39.3	1.7 %	—	—	16.2	2.6 %	20.6	1.8 %	35.9	1.3 %	28.9	1.5 %
Idle	118	1.5	79.0	1.6 %	39.1	1.7 %	—	—	16.0	2.7 %	20.6	1.8 %	39.3	1.3 %	31.6	1.5 %
Idle	133	1.5	81.8	1.5 %	38.5	1.7 %	—	—	15.4	2.7 %	20.6	1.8 %	42.7	1.3 %	34.5	1.5 %
Idle	147	1.5	85.0	1.6 %	38.1	1.8 %	—	—	14.9	2.6 %	20.6	1.8 %	46.2	1.3 %	37.3	1.5 %
Idle	162	1.5	88.7	1.5 %	38.3	1.7 %	—	—	15.2	2.7 %	20.7	1.8 %	49.8	1.2 %	40.3	1.5 %
Idle	177	1.5	92.1	1.5 %	38.4	1.7 %	—	—	15.2	2.7 %	20.7	1.8 %	53.1	1.3 %	43.0	1.4 %
Idle	192	1.5	95.5	1.5 %	38.0	1.7 %	—	—	14.9	2.7 %	20.8	1.8 %	56.7	1.2 %	46.0	1.4 %
Idle	206	1.5	99.3	1.5 %	38.5	1.7 %	—	—	15.2	2.7 %	20.9	1.8 %	60.1	1.2 %	48.8	1.4 %
WAV	59	1.25	134	1.3 %	108	1.3 %	5.79	1.4 %	22.6	2.8 %	73.2	1.3 %	24.5	1.3 %	18.9	1.3 %
WAV	74	1.25	134	1.4 %	106	1.3 %	5.81	1.4 %	20.5	3.1 %	73.4	1.3 %	26.7	1.3 %	20.8	1.3 %
WAV	88	1.25	135	1.4 %	105	1.3 %	5.81	1.4 %	19.2	3.3 %	73.5	1.3 %	29.0	1.3 %	22.6	1.4 %
WAV	59	1.5	151	1.4 %	113	1.3 %	5.79	1.4 %	22.7	2.9 %	78.0	1.3 %	36.4	1.3 %	29.2	1.4 %
WAV	74	1.5	152	1.4 %	111	1.3 %	5.80	1.4 %	20.4	3.2 %	78.3	1.3 %	39.6	1.3 %	32.1	1.5 %
WAV	88	1.5	154	1.4 %	110	1.3 %	5.81	1.4 %	19.1	3.3 %	78.4	1.3 %	43.1	1.3 %	34.9	1.5 %
WAV	103	1.5	157	1.4 %	109	1.3 %	5.82	1.4 %	18.4	3.4 %	78.7	1.3 %	46.6	1.3 %	37.8	1.5 %
WAV	118	1.5	160	1.4 %	109	1.4 %	5.83	1.4 %	18.0	3.5 %	78.7	1.3 %	49.9	1.3 %	40.6	1.5 %
WAV	133	1.5	163	1.4 %	108	1.3 %	5.83	1.4 %	17.4	3.5 %	78.8	1.3 %	53.4	1.3 %	43.5	1.5 %
WAV	147	1.5	166	1.4 %	108	1.4 %	5.83	1.4 %	16.8	3.6 %	78.9	1.3 %	56.8	1.3 %	46.2	1.5 %
WAV	162	1.5	170	1.4 %	109	1.4 %	5.83	1.4 %	17.1	3.6 %	79.0	1.3 %	60.5	1.3 %	49.2	1.5 %
WAV	177	1.5	173	1.4 %	108	1.4 %	5.84	1.4 %	17.1	3.7 %	79.0	1.3 %	63.5	1.3 %	51.8	1.5 %
WAV	192	1.5	176	1.4 %	108	1.4 %	5.83	1.4 %	16.7	3.7 %	79.0	1.3 %	67.1	1.3 %	54.8	1.5 %
WAV	206	1.5	180	1.4 %	108	1.4 %	5.83	1.4 %	17.0	3.6 %	79.1	1.3 %	70.5	1.3 %	57.7	1.4 %
DECtalk	74	1.25	324	1.2 %	238	1.2 %	5.35	1.4 %	128	1.9 %	93.7	1.6 %	82.8	1.2 %	66.4	1.2 %
DECtalk	88	1.25	352	1.2 %	258	1.3 %	5.82	1.4 %	137	2.0 %	103	1.4 %	91.8	1.3 %	74.1	1.6 %
DECtalk	74	1.5	366	1.2 %	242	1.2 %	5.31	1.4 %	128	1.9 %	98.0	1.6 %	120	1.2 %	101	1.6 %
DECtalk	88	1.5	399	1.2 %	260	1.2 %	5.82	1.4 %	135	2.0 %	107	1.4 %	135	1.2 %	113	1.7 %
DECtalk	103	1.5	396	1.4 %	253	1.4 %	5.82	1.4 %	127	2.3 %	107	1.5 %	140	1.5 %	117	1.9 %
DECtalk	118	1.5	383	1.5 %	239	1.5 %	5.82	1.4 %	116	2.5 %	105	1.6 %	141	1.6 %	118	2.1 %
DECtalk	133	1.5	386	1.6 %	238	1.6 %	5.82	1.4 %	113	2.7 %	106	1.6 %	145	1.7 %	121	2.2 %
DECtalk	147	1.5	397	1.7 %	243	1.6 %	5.82	1.4 %	117	2.7 %	108	1.7 %	151	1.7 %	126	2.2 %
DECtalk	162	1.5	396	1.7 %	240	1.6 %	5.83	1.4 %	115	2.8 %	107	1.7 %	153	1.8 %	128	2.4 %
DECtalk	177	1.5	377	1.8 %	222	1.7 %	5.83	1.4 %	101	3.1 %	103	1.7 %	152	2.0 %	127	2.7 %
DECtalk	192	1.5	379	1.9 %	220	1.8 %	5.83	1.4 %	98.8	3.2 %	103	1.7 %	156	2.1 %	130	2.8 %
DECtalk	206	1.5	366	1.9 %	208	1.8 %	5.83	1.4 %	90.6	3.4 %	100	1.8 %	155	2.2 %	129	3.1 %
MPEG-1	192	1.5	675	1.5 %	399	1.6 %	5.71	1.4 %	231	1.9 %	138	1.5 %	269	1.4 %	224	1.2 %
MPEG-1	206	1.5	683	1.5 %	397	1.5 %	5.70	1.4 %	230	1.8 %	137	1.5 %	279	1.4 %	233	1.3 %

Table 20. Measured average power for an Itsy with the speaker and microphone disconnected (Itsy no. 34, 3.75 V power supply).

Benchmark	Freq. [MHz]	V_{core} [V]	P_{batt} [mW]	$\varepsilon_{P_{batt}}$	$P_{main\ in}$ [mW]	$\varepsilon_{P_{main\ in}}$	P_{analog} [mW]	$\varepsilon_{P_{analog}}$	P_{DRAM} [mW]	$\varepsilon_{P_{DRAM}}$	$P_{digital}$ [mW]	$\varepsilon_{P_{digital}}$	$P_{core\ in}$ [mW]	$\varepsilon_{P_{core\ in}}$	P_{core} [mW]	$\varepsilon_{P_{core}}$
Deep sleep	—	—	4.39	4.0 %	3.83	4.5 %	—	—	—	—	2.90	4.8 %	0.21	12.5 %	—	—
Sleep	—	—	7.15	2.9 %	6.56	3.1 %	—	—	2.45	5.5 %	3.08	4.6 %	0.21	12.5 %	—	—
Sleep, LCD	—	—	22.5	1.6 %	21.8	1.7 %	—	—	2.47	5.4 %	17.7	1.7 %	0.21	12.4 %	—	—
Idle	59	1.25	51.9	1.7 %	34.3	1.7 %	—	—	19.9	2.3 %	12.1	2.2 %	17.0	1.4 %	13.0	1.4 %
Idle	74	1.25	52.4	1.8 %	32.5	1.9 %	—	—	18.1	2.4 %	12.1	2.2 %	19.3	1.4 %	14.8	1.4 %
Idle	88	1.25	53.3	1.6 %	31.1	1.7 %	—	—	16.9	2.6 %	12.1	2.2 %	21.6	1.3 %	16.7	1.4 %
Idle	59	1.5	65.3	1.7 %	39.4	1.7 %	—	—	19.9	2.3 %	16.9	1.9 %	25.4	1.4 %	20.2	1.5 %
Idle	74	1.5	66.7	1.5 %	37.3	1.6 %	—	—	18.1	2.5 %	16.9	1.9 %	28.7	1.3 %	23.1	1.5 %
Idle	88	1.5	69.2	1.7 %	36.3	1.8 %	—	—	16.9	2.6 %	17.0	1.9 %	32.3	1.4 %	25.9	1.5 %
Idle	103	1.5	72.1	1.6 %	35.6	1.7 %	—	—	16.2	2.6 %	17.1	1.9 %	35.9	1.3 %	28.9	1.5 %
Idle	118	1.5	75.3	1.6 %	35.5	1.8 %	—	—	16.0	2.6 %	17.2	1.9 %	39.2	1.3 %	31.6	1.5 %
Idle	133	1.5	78.3	1.6 %	34.9	1.8 %	—	—	15.4	2.7 %	17.2	1.9 %	42.7	1.3 %	34.5	1.5 %
Idle	147	1.5	81.4	1.6 %	34.5	1.8 %	—	—	15.0	2.7 %	17.2	1.9 %	46.2	1.3 %	37.3	1.5 %
Idle	162	1.5	85.2	1.6 %	34.8	1.8 %	—	—	15.2	2.7 %	17.3	1.9 %	49.8	1.3 %	40.2	1.4 %
Idle	177	1.5	88.5	1.5 %	34.8	1.8 %	—	—	15.2	2.7 %	17.3	1.9 %	53.1	1.2 %	43.0	1.4 %
Idle	192	1.5	92.0	1.6 %	34.6	1.8 %	—	—	14.9	2.7 %	17.4	1.9 %	56.7	1.3 %	45.9	1.4 %
Idle	206	1.5	95.8	1.5 %	34.9	1.8 %	—	—	15.2	2.7 %	17.4	1.9 %	60.2	1.2 %	48.8	1.4 %
WAV	59	1.25	256	1.3 %	230	1.3 %	105	1.1 %	22.7	2.9 %	69.9	1.3 %	24.5	1.4 %	18.9	1.3 %
WAV	74	1.25	257	1.3 %	228	1.3 %	106	1.1 %	20.5	3.1 %	70.1	1.3 %	26.7	1.4 %	20.7	1.3 %
WAV	88	1.25	258	1.3 %	227	1.3 %	106	1.1 %	19.1	3.3 %	70.2	1.3 %	29.0	1.4 %	22.6	1.4 %
WAV	59	1.5	273	1.3 %	235	1.3 %	105	1.1 %	22.6	2.9 %	74.8	1.3 %	36.3	1.4 %	29.3	1.4 %
WAV	74	1.5	275	1.3 %	233	1.3 %	106	1.1 %	20.4	3.1 %	75.0	1.3 %	39.6	1.4 %	32.1	1.5 %
WAV	88	1.5	277	1.4 %	232	1.3 %	106	1.1 %	19.0	3.3 %	75.2	1.3 %	43.1	1.4 %	34.9	1.5 %
WAV	103	1.5	281	1.4 %	232	1.3 %	106	1.1 %	18.3	3.4 %	75.4	1.3 %	46.7	1.4 %	37.8	1.5 %
WAV	118	1.5	283	1.3 %	231	1.3 %	106	1.1 %	18.0	3.5 %	75.4	1.3 %	49.8	1.4 %	40.5	1.5 %
WAV	133	1.5	287	1.3 %	231	1.3 %	106	1.1 %	17.3	3.5 %	75.5	1.3 %	53.3	1.3 %	43.4	1.5 %
WAV	147	1.5	289	1.4 %	230	1.3 %	106	1.1 %	16.8	3.5 %	75.5	1.3 %	56.8	1.3 %	46.2	1.5 %
WAV	162	1.5	294	1.4 %	231	1.3 %	106	1.1 %	17.1	3.6 %	75.7	1.3 %	60.4	1.3 %	49.2	1.5 %
WAV	177	1.5	297	1.4 %	231	1.3 %	106	1.1 %	17.0	3.6 %	75.7	1.3 %	63.6	1.3 %	51.9	1.5 %
WAV	192	1.5	300	1.3 %	231	1.3 %	106	1.1 %	16.6	3.7 %	75.7	1.3 %	67.0	1.3 %	54.8	1.5 %
WAV	206	1.5	304	1.4 %	231	1.3 %	106	1.1 %	17.0	3.7 %	75.8	1.3 %	70.6	1.3 %	57.7	1.5 %
DECtalk	74	1.25	347	1.3 %	261	1.4 %	26.4	1.4 %	129	1.9 %	90.3	1.6 %	82.7	1.3 %	66.4	1.2 %
DECtalk	88	1.25	377	1.4 %	283	1.4 %	28.9	1.3 %	136	2.0 %	99.5	1.5 %	91.5	1.4 %	74.0	1.6 %
DECtalk	74	1.5	389	1.3 %	265	1.4 %	26.3	1.4 %	128	1.9 %	94.7	1.6 %	121	1.3 %	101	1.6 %
DECtalk	88	1.5	423	1.3 %	285	1.4 %	28.9	1.3 %	135	2.0 %	104	1.4 %	135	1.4 %	113	1.7 %
DECtalk	103	1.5	421	1.6 %	278	1.6 %	28.9	1.3 %	127	2.3 %	104	1.5 %	140	1.6 %	117	1.9 %
DECtalk	118	1.5	401	1.8 %	259	1.7 %	28.8	1.3 %	112	2.6 %	101	1.6 %	138	1.8 %	116	2.1 %
DECtalk	133	1.5	412	1.8 %	263	1.8 %	28.8	1.3 %	114	2.7 %	103	1.6 %	145	1.9 %	121	2.2 %
DECtalk	147	1.5	420	1.9 %	267	1.9 %	28.9	1.3 %	116	2.8 %	105	1.7 %	150	2.0 %	125	2.2 %
DECtalk	162	1.5	421	1.9 %	265	1.9 %	28.9	1.3 %	115	2.8 %	104	1.7 %	153	2.1 %	128	2.4 %
DECtalk	177	1.5	402	2.1 %	247	2.0 %	29.0	1.3 %	101	3.1 %	99.8	1.7 %	152	2.3 %	127	2.7 %
DECtalk	192	1.5	405	2.2 %	246	2.1 %	28.8	1.3 %	99.4	3.2 %	100	1.8 %	156	2.4 %	130	2.8 %
DECtalk	206	1.5	392	2.2 %	233	2.1 %	28.8	1.3 %	90.7	3.4 %	97.1	1.8 %	156	2.6 %	129	3.1 %
MPEG-1	192	1.5	794	1.5 %	517	1.5 %	104	1.1 %	231	2.0 %	133	1.6 %	268	1.4 %	224	1.2 %
MPEG-1	206	1.5	803	1.5 %	515	1.5 %	104	1.1 %	230	1.8 %	133	1.5 %	279	1.4 %	233	1.2 %

Table 21. Measured average power for an Itsy with the LCD disconnected (Itsy no. 34, 3.75 V power supply).

Benchmark	Freq. [MHz]	V_{core} [V]	P_{mon} [mW]	$\varepsilon_{P_{\text{mon}}}$	$P_{\text{main sup}}$ [mW]	$\varepsilon_{P_{\text{main sup}}}$	P_{spkr} [mW]	$\varepsilon_{P_{\text{spkr}}}$	P_{codec} [mW]	$\varepsilon_{P_{\text{codec}}}$	P_{DRAM} [mW]	$\varepsilon_{P_{\text{DRAM}}}$	P_{LCD} [mW]	$\varepsilon_{P_{\text{LCD}}}$	P_{main} [mW]	$\varepsilon_{P_{\text{main}}}$	$P_{\text{core sup}}$ [mW]	$\varepsilon_{P_{\text{core sup}}}$	P_{core} [mW]	$\varepsilon_{P_{\text{core}}}$
Deep sleep	—	—	0.36	110 %	0.92	34 %	—	—	—	—	—	—	—	—	2.90	4.8 %	0.21	13 %	—	—
Sleep	—	—	0.42	110 %	1.0	46 %	—	—	—	—	2.43	5.5 %	—	—	3.08	4.6 %	0.21	13 %	—	—
Sleep, LCD	—	—	0.52	160 %	1.8	47 %	—	—	—	—	2.45	5.5 %	3.1	20 %	17.7	1.7 %	0.21	13 %	—	—
Idle	59	1.25	0.61	290 %	2.5	55 %	—	—	—	—	19.9	2.3 %	3.4	17 %	12.1	2.2 %	4.0	11 %	13.0	1.4 %
Idle	74	1.25	0.62	290 %	2.4	56 %	—	—	—	—	18.1	2.4 %	3.4	17 %	12.1	2.2 %	4.5	11 %	14.8	1.4 %
Idle	88	1.25	0.60	280 %	2.1	61 %	—	—	—	—	16.9	2.6 %	3.4	17 %	12.1	2.2 %	4.9	11 %	16.7	1.4 %
Idle	59	1.5	0.65	330 %	2.7	55 %	—	—	—	—	19.9	2.3 %	3.4	20 %	16.9	1.9 %	5.1	13 %	20.2	1.5 %
Idle	74	1.5	0.68	310 %	2.5	58 %	—	—	—	—	18.0	2.5 %	3.4	20 %	16.9	1.9 %	5.7	13 %	23.1	1.5 %
Idle	88	1.5	0.67	330 %	2.5	58 %	—	—	—	—	16.9	2.6 %	3.4	20 %	17.0	1.9 %	6.4	13 %	25.9	1.5 %
Idle	103	1.5	0.64	350 %	2.4	58 %	—	—	—	—	16.2	2.6 %	3.4	20 %	17.1	1.9 %	7.0	13 %	28.9	1.5 %
Idle	118	1.5	0.68	340 %	2.5	58 %	—	—	—	—	16.0	2.6 %	3.4	20 %	17.2	1.9 %	7.6	13 %	31.6	1.5 %
Idle	133	1.5	0.65	380 %	2.5	57 %	—	—	—	—	15.4	2.7 %	3.4	20 %	17.2	1.9 %	8.3	13 %	34.5	1.5 %
Idle	147	1.5	0.66	380 %	2.4	57 %	—	—	—	—	15.0	2.7 %	3.4	20 %	17.2	1.9 %	8.9	13 %	37.3	1.5 %
Idle	162	1.5	0.69	370 %	2.5	57 %	—	—	—	—	15.2	2.7 %	3.4	21 %	17.3	1.9 %	10	13 %	40.2	1.4 %
Idle	177	1.5	0.70	380 %	2.5	58 %	—	—	—	—	15.2	2.7 %	3.4	20 %	17.3	1.9 %	10	13 %	43.0	1.4 %
Idle	192	1.5	0.71	380 %	2.4	58 %	—	—	—	—	14.8	2.7 %	3.4	20 %	17.4	1.9 %	11	12 %	46.0	1.4 %
Idle	206	1.5	0.72	390 %	2.4	59 %	—	—	—	—	15.2	2.7 %	3.4	21 %	17.4	1.9 %	11	12 %	48.8	1.4 %
WAV	59	1.25	2.2	300 %	32	18 %	99.6	1.3 %	5.79	1.4 %	22.5	2.9 %	3.5	52 %	69.9	1.3 %	5.5	11 %	18.9	1.3 %
WAV	74	1.25	2.2	290 %	32	18 %	99.8	1.3 %	5.81	1.4 %	20.4	3.1 %	3.4	54 %	70.1	1.3 %	5.9	11 %	20.8	1.3 %
WAV	88	1.25	2.2	310 %	32	18 %	99.9	1.3 %	5.82	1.4 %	19.1	3.3 %	3.4	54 %	70.2	1.3 %	6.4	11 %	22.6	1.4 %
WAV	59	1.5	2.4	300 %	32	18 %	99.4	1.3 %	5.79	1.4 %	22.6	2.9 %	3.4	56 %	74.8	1.3 %	7.1	13 %	29.3	1.4 %
WAV	74	1.5	2.3	310 %	32	18 %	99.7	1.3 %	5.80	1.4 %	20.4	3.2 %	3.3	58 %	75.0	1.3 %	7.5	14 %	32.1	1.5 %
WAV	88	1.5	2.4	300 %	32	18 %	99.8	1.3 %	5.81	1.4 %	19.0	3.4 %	3.3	58 %	75.2	1.3 %	8.0	14 %	34.9	1.5 %
WAV	103	1.5	2.3	320 %	32	18 %	100	1.3 %	5.82	1.4 %	18.3	3.4 %	3.4	57 %	75.4	1.3 %	8.8	14 %	37.9	1.5 %
WAV	118	1.5	2.3	310 %	32	18 %	100	1.3 %	5.83	1.4 %	18.0	3.5 %	3.5	56 %	75.4	1.3 %	9.3	14 %	40.5	1.5 %
WAV	133	1.5	2.4	310 %	32	18 %	100	1.3 %	5.83	1.4 %	17.3	3.6 %	3.4	57 %	75.5	1.3 %	10	14 %	43.5	1.5 %
WAV	147	1.5	2.4	320 %	32	18 %	100	1.3 %	5.83	1.4 %	16.7	3.6 %	3.4	57 %	75.5	1.3 %	11	14 %	46.3	1.5 %
WAV	162	1.5	2.3	330 %	32	18 %	100	1.3 %	5.83	1.4 %	17.1	3.6 %	3.4	57 %	75.7	1.3 %	11	14 %	49.2	1.5 %
WAV	177	1.5	2.4	330 %	32	18 %	100	1.3 %	5.84	1.4 %	17.0	3.6 %	3.4	57 %	75.7	1.3 %	12	14 %	51.8	1.5 %
WAV	192	1.5	2.5	310 %	32	18 %	100	1.3 %	5.83	1.4 %	16.6	3.7 %	3.5	56 %	75.7	1.3 %	12	14 %	54.8	1.5 %
WAV	206	1.5	2.4	340 %	32	18 %	100	1.3 %	5.83	1.4 %	17.0	3.7 %	3.5	56 %	75.8	1.3 %	13	14 %	57.6	1.4 %
DECtalk	74	1.25	2.8	320 %	16	48 %	20.9	2.1 %	5.35	1.4 %	129	1.9 %	3.1	92 %	90.3	1.6 %	16	11 %	66.3	1.2 %
DECtalk	88	1.25	3.3	310 %	18	45 %	22.9	1.9 %	5.82	1.4 %	136	2.0 %	3.4	85 %	99.5	1.5 %	18	14 %	74.0	1.6 %
DECtalk	74	1.5	3.1	310 %	17	46 %	21.0	2.1 %	5.31	1.4 %	127	1.9 %	3.4	86 %	94.7	1.6 %	20	15 %	101	1.6 %
DECtalk	88	1.5	3.6	300 %	18	45 %	23.0	1.9 %	5.82	1.4 %	136	2.0 %	3.6	82 %	104	1.4 %	22	17 %	113	1.7 %
DECtalk	103	1.5	3.8	340 %	19	48 %	22.9	1.9 %	5.82	1.4 %	127	2.3 %	3.4	92 %	104	1.5 %	23	19 %	117	1.9 %
DECtalk	118	1.5	3.7	360 %	18	51 %	23.0	1.9 %	5.82	1.4 %	116	2.5 %	4.4	73 %	101	1.6 %	23	21 %	117	2.1 %
DECtalk	133	1.5	3.5	410 %	17	54 %	23.1	1.9 %	5.82	1.4 %	114	2.7 %	3.3	110 %	103	1.6 %	24	22 %	121	2.2 %
DECtalk	147	1.5	2.8	540 %	19	53 %	23.2	1.9 %	5.82	1.4 %	117	2.7 %	3.7	94 %	105	1.7 %	25	22 %	126	2.2 %
DECtalk	162	1.5	3.0	510 %	18	55 %	23.1	1.9 %	5.83	1.4 %	115	2.8 %	3.3	110 %	104	1.7 %	25	24 %	128	2.4 %
DECtalk	177	1.5	3.3	480 %	18	53 %	23.0	1.9 %	5.83	1.4 %	101	3.1 %	3.5	99 %	99.8	1.7 %	26	26 %	126	2.7 %
DECtalk	192	1.5	3.3	490 %	19	53 %	23.0	1.9 %	5.83	1.4 %	99.0	3.2 %	3.3	110 %	100	1.8 %	26	27 %	130	2.8 %
DECtalk	206	1.5	3.1	520 %	17	55 %	23.0	1.9 %	5.83	1.4 %	89.3	3.5 %	3.0	120 %	97.1	1.8 %	26	29 %	128	3.1 %
MPEG-1	192	1.5	8.8	270 %	49	32 %	98.3	1.3 %	5.71	1.4 %	231	1.9 %	4.5	91 %	133	1.6 %	44	15 %	225	1.2 %
MPEG-1	206	1.5	8.9	260 %	49	30 %	97.8	1.3 %	5.70	1.4 %	230	1.8 %	4.2	93 %	133	1.5 %	47	15 %	233	1.2 %

Table 22. Average power breakdown (Itsy no. 34, 3.75 V power supply).

Benchmark	Freq. [MHz]	V_{core} [V]	P_{mon}	$P_{main\ sup}$	P_{spkr}	P_{codec}	P_{DRAM}	P_{LCD}	P_{main}	$P_{core\ sup}$	P_{core}
Deep sleep	—	—	8 %	21 %	—	—	—	—	66 %	4.7 %	—
Sleep	—	—	6 %	14 %	—	—	34 %	—	43 %	2.9 %	—
Sleep, LCD	—	—	2 %	7 %	—	—	9.5 %	12 %	69 %	0.8 %	—
Idle	59	1.25	1 %	5 %	—	—	36 %	6 %	21.7 %	7.2 %	23.5 %
Idle	74	1.25	1 %	4 %	—	—	32 %	6 %	21.6 %	8.0 %	26.5 %
Idle	88	1.25	1 %	4 %	—	—	30 %	6 %	21.4 %	9 %	29.4 %
Idle	59	1.5	1 %	4 %	—	—	29 %	5 %	24.5 %	7 %	29.4 %
Idle	74	1.5	1 %	4 %	—	—	26 %	5 %	24.1 %	8 %	32.8 %
Idle	88	1.5	1 %	3 %	—	—	23.2 %	5 %	23.4 %	9 %	36 %
Idle	103	1.5	1 %	3 %	—	—	21.4 %	4.5 %	22.6 %	9 %	38 %
Idle	118	1.5	1 %	3 %	—	—	20.3 %	4.3 %	21.8 %	10 %	40 %
Idle	133	1.5	1 %	3 %	—	—	18.8 %	4.2 %	21.0 %	10 %	42 %
Idle	147	1.5	1 %	3 %	—	—	17.6 %	4.0 %	20.3 %	10 %	44 %
Idle	162	1.5	1 %	3 %	—	—	17.1 %	3.8 %	19.5 %	11 %	45 %
Idle	177	1.5	1 %	3 %	—	—	16.5 %	3.7 %	18.8 %	11 %	47 %
Idle	192	1.5	1 %	3 %	—	—	15.5 %	3.6 %	18.2 %	11 %	48 %
Idle	206	1.5	1 %	2 %	—	—	15.3 %	3.4 %	17.6 %	11 %	49 %
WAV	59	1.25	1 %	12 %	38.3 %	2.2 %	8.7 %	1.3 %	26.9 %	2.1 %	7.3 %
WAV	74	1.25	1 %	12 %	38.3 %	2.2 %	7.8 %	1.3 %	26.9 %	2.3 %	8.0 %
WAV	88	1.25	1 %	12 %	38.2 %	2.2 %	7.3 %	1.3 %	26.8 %	2.4 %	8.6 %
WAV	59	1.5	1 %	12 %	35.9 %	2.1 %	8.2 %	1.2 %	27.0 %	2.6 %	10.6 %
WAV	74	1.5	1 %	12 %	35.8 %	2.1 %	7.3 %	1.2 %	26.9 %	2.7 %	11.5 %
WAV	88	1.5	1 %	11 %	35.6 %	2.1 %	6.8 %	1.2 %	26.8 %	2.9 %	12.4 %
WAV	103	1.5	1 %	11 %	35.2 %	2.0 %	6.4 %	1.2 %	26.5 %	3.1 %	13.3 %
WAV	118	1.5	1 %	11 %	34.8 %	2.0 %	6.3 %	1.2 %	26.3 %	3.2 %	14.1 %
WAV	133	1.5	1 %	11 %	34.5 %	2.0 %	6.0 %	1.2 %	26.0 %	3.4 %	15.0 %
WAV	147	1.5	1 %	11 %	34.1 %	2.0 %	5.7 %	1.2 %	25.8 %	3.6 %	15.8 %
WAV	162	1.5	1 %	11 %	33.7 %	2.0 %	5.8 %	1.1 %	25.5 %	3.8 %	16.6 %
WAV	177	1.5	1 %	11 %	33.3 %	1.9 %	5.7 %	1.1 %	25.2 %	3.9 %	17.2 %
WAV	192	1.5	1 %	11 %	33.0 %	1.9 %	5.5 %	1.1 %	24.9 %	4.0 %	18.1 %
WAV	206	1.5	1 %	11 %	32.6 %	1.9 %	5.5 %	1.1 %	24.6 %	4.2 %	18.7 %
DECtalk	74	1.25	1 %	5 %	6.0 %	1.5 %	37 %	0.9 %	25.8 %	4.7 %	18.9 %
DECtalk	88	1.25	1 %	5 %	6.0 %	1.5 %	36 %	0.9 %	26.1 %	4.6 %	19.4 %
DECtalk	74	1.5	1 %	4 %	5.4 %	1.4 %	32 %	0.9 %	24.1 %	5.1 %	25.7 %
DECtalk	88	1.5	1 %	4 %	5.4 %	1.4 %	32 %	0.8 %	24.2 %	5.1 %	26.4 %
DECtalk	103	1.5	1 %	4 %	5.4 %	1.4 %	30 %	0.8 %	24.4 %	5 %	27.5 %
DECtalk	118	1.5	1 %	4 %	5.6 %	1.4 %	28 %	1.1 %	24.5 %	6 %	29 %
DECtalk	133	1.5	1 %	4 %	5.6 %	1.4 %	27 %	0.8 %	24.8 %	6 %	29 %
DECtalk	147	1.5	1 %	4 %	5.4 %	1.4 %	27 %	0.9 %	24.5 %	6 %	30 %
DECtalk	162	1.5	1 %	4 %	5.5 %	1.4 %	27 %	0.8 %	24.4 %	6 %	30 %
DECtalk	177	1.5	1 %	5 %	5.7 %	1.4 %	25 %	0.9 %	24.6 %	6 %	31 %
DECtalk	192	1.5	1 %	5 %	5.6 %	1.4 %	24 %	0.8 %	24.5 %	6 %	32 %
DECtalk	206	1.5	1 %	4 %	5.9 %	1.5 %	23 %	0.8 %	24.7 %	7 %	33 %
MPEG-1	192	1.5	1 %	6 %	12.3 %	0.7 %	28.9 %	0.6 %	16.7 %	5.5 %	28.1 %
MPEG-1	206	1.5	1 %	6 %	12.1 %	0.7 %	28.4 %	0.5 %	16.5 %	5.8 %	28.8 %

Table 23. Relative average power breakdown (Itsy no. 34, 3.75 V power supply).