Fast Integrated Tools for Circuit Design with FPGAs

Stephan W. Gehring[†], Stefan H.-M. Ludwig[‡]

Institute for Computer Systems
Swiss Federal Institute of Technology (ETH)
Zürich, Switzerland
gehring@interval.com, ludwig@pa.dec.com

Abstract

To implement high-density and high-speed FPGA circuits, designers need tight control over the circuit implementation process. However, current design tools are unsuited for this purpose as they lack fast turnaround times, interactiveness, and integration. We present a system for the Xilinx XC6200 FPGA, which addresses these issues. It consists of a suite of tightly integrated tools for the XC6200 architecture centered around an architecture-independent tool framework. The system lets the designer easily intervene at various stages of the design process and features design cycle times (from an HDL specification to a complete layout) in the order of seconds.

1 Introduction

Fully automatic circuit synthesis from an HDL description is a difficult and computationally intensive task, especially for Field-Programmable Gate Arrays (FPGAs). Ideally, circuits are mapped, placed and routed without human intervention. However, to implement *high-density* or *high-speed* circuits with FPGAs, today's designers are faced with the need to *manually intervene* in the design process and reiterate the implementation cycle until the circuit implementation meets the requirements [4, 20]. Unfortunately, designers cannot expect much support from current design tools as the latter do not support fast iterative design cycles and offer only limited interactivity. This effectively hinders the designer from controlling the implementation process.

Developers of circuit design tools face yet a different problem: the still growing number of new FPGA architectures pressures them to create new tool suites at a rapid pace. Since the tools are typically tailored to a specific architecture, they are rewritten almost completely for every new architecture. Over time this results in a huge collection of difficult to maintain tools.

The system we present addresses these problems. It tightly integrates the circuit design process in a single environment, from the initial circuit specification in an HDL down to bitstream generation. At all stages of the process, the user can exert control over the circuit implementation and thus efficiently guide the tools towards the desired solution. The system targets the experienced user desiring complete control over the circuit implementation and offers a highly interactive and fast design cycle. It consists of an architecture-independent framework (front-end) which is complemented by architecture-dependent back-ends. This enhances tool maintenance as the framework is reused for each back-end. A complete back-end including layout synthesis has been developed for the Xilinx XC6200 architecture [23]. A further back-end for the Atmel AT6000 architecture [3] exists which comprises a layout editor for manual circuit implementation and a bitstream generator.

In the following, we first describe how the tight integration of our tools is achieved. Then we explain how the designer can influence the implementation process and discuss the techniques used to achieve the necessary speedy design cycle. We support our claims by measurements and compare our system with the vendor-supplied development system for the XC6200. A more detailed presentation of the described system can be found in [8] and [14].

2 Tool Integration

One of the major goals of this work was to tightly integrate the various circuit design tools into a single development environment. Traditionally, the tools used in the circuit design process are very loosely coupled and are often developed by a variety of independent companies. For instance, the tools used to capture designs may come from a CAD tool developer, while the layout synthesis and bitstream generation tools are provided by the chip manufacturer. Typically, tool communication is achieved by exchanging disk files containing the design data in standard formats.

We feel that this loose coupling bears several disadvantages. First, it makes the seamless integration of the tools a difficult, if not impossible, task. This, however, is a prerequisite to quickly switch back and forth between design tools during the design process. Second, file-based inter-tool communication necessitates conversions between internal and external formats on both ends, which often results in design information loss and makes data exchange a slow and vulnerable process. Third, decoupled tool development does not take into account that a significant part of a tool suite is independent of any specific architecture and could thus profitably be reused by several tools. Taking advantage of this reduces the size and memory requirements of tools and eases system maintenance.

We have addressed these problems by capturing the common traits of design tools in an *application framework* for circuit design tools [9, 8]. To create tools for a specific FPGA architecture, this architecture-independent framework is extended with architecture-specific components.

The foundation for the tight integration of the framework and its extensions lies in the use of a *single data structure* to represent circuits throughout the system [9, 8]. That is, all tools, whether

[†] Interval Research Corporation, Palo Alto, California
[‡] DEC Systems Research Center, Palo Alto, California

architecture-independent or -dependent, use a *universal circuit representation* defined in the core of the framework (Figure 1). The design tools operate in a shared memory environment and modify the data structure *in situ*. Data exchange between tools can thus be realized efficiently just by passing a reference to the data structure. This avoids data structure conversions altogether and simplifies both framework and tool implementations considerably. Keeping even large circuits entirely in main memory is possible due to the compactness and simplicity of the representation.

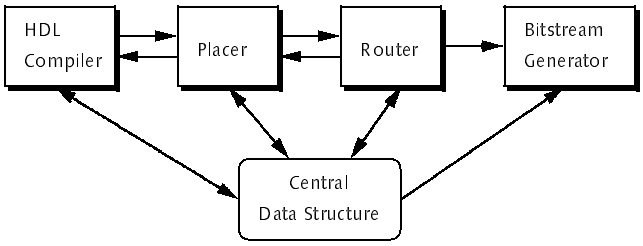

Figure 1: Single Circuit Representation Accessed by Multiple Design Tools

The data structure represents circuits as a hierarchical forest of binary trees. Each tree specifies the Boolean equation for a single circuit output. To accommodate for the needs of placers and routers, positional information and net lists can be attached to the nodes. All tools involved in the implementation process *support and maintain the hierarchical circuit structure*. We have found that this greatly improves the efficiency and quality of the layout synthesis tools (see Section 4).

To describe the hierarchy of a circuit, the framework uses *parameterizable templates*. A template is a representation of a subcircuit. Every instance of such a template is an exact copy of the template, i.e. it contains the same gates and net lists and they are at the same (relative) positions as in the master copy. Tools, such as a placer, can exploit this additional knowledge to efficiently produce regular layouts for regular circuits, such as bit-sliced designs.

For textual design specification, the framework comprises a *compiler for the hardware description language Lola* [21, 22]. The compiler translates a Lola circuit specification into the universal data structure ready to be processed further. The Lola HDL supports parameterized descriptions of subcircuits, e.g. N-bit adders, and allows the designer to pass placement hints to back-end tools, i.e. to constrain the placement of circuit components.

Also provided is a *layout editor framework*, which can be customized to create layout editors for specific FPGA architectures. The layout editors fully support hierarchical layout and allow circuits to be constructed manually. The latter option is typically used only for small to medium sized circuits and in education. The layout editor framework has proven so versatile that a *schematics editor* was implemented with the framework.

To aid in the secure manual construction of circuits, the framework features a *design checker*, which checks two circuit descriptions, e.g. an HDL specification and a layout, for Boolean equivalence. The design checker is mainly used in education, where circuits are laid out manually by the student and are then checked against a Lola specification. It has also been used to prove the correctness of the layout synthesis tools themselves. To prove equivalence between two Boolean expressions, the design checker uses ordered binary decision diagrams (OBDDs) [5].

In the course of our work, we have found that significant parts of design tools are indeed architecture-independent and are therefore profitably implemented by the framework. The framework-based approach also increases software reliability, as common functionality is implemented once only and reused by several back-ends. The use of a single circuit representation resulted in the desired tightly integrated system with short response times and high interactivity.

3 Controlling the Design Process

A key issue in the implementation of high-speed and high-density circuits with FPGAs is allowing the (experienced) designer complete control over the circuit implementation. This is because, unlike in the software world, resources in an FPGA are scarce and therefore need to be tightly managed. Being the creator of the circuit, the designer has the most intimate knowledge of the circuit's structure and therefore knows best how it should be laid out. However, the complexity of today's circuits requires support by layout synthesis tools. The designer's goal is therefore to guide the synthesis tools towards the desired solution. To enable this, our system allows the designer to influence the outcome of the tools at various levels.

At the circuit specification level, the designer can specify the placement of circuit components using *position assignments* in the Lola HDL. These placement hints are passed on to the automatic placer which pre-places the parts prior to placing the remaining circuit parts. After placement, the layout editor can be used to enhance the placement manually. Since the hierarchy of the circuit is preserved by all tools and visualized by the layout editor, the designer is able to quickly identify and rearrange individual cells or entire subcircuits. As the layout editor is used frequently, we have taken care to make circuit manipulation as simple and as fast as possible. Once a satisfactory placement is achieved, more placements hints can be added to the HDL specification to reflect the new placement. These will constrain the placer during the next design iteration and will thus relieve the user from having to make the same changes again during subsequent iterations. A compile-place cycle takes only a few seconds and the design quickly converges to the desired placement.

The designer can also influence the routing process. The router allows *individual nets to be routed* and also supports the recording and playback of *routing scripts*, which define the sequence in which the nets are routed. These scripts can be conveniently appended to the HDL specification text. Furthermore, the router can be constrained to only use certain types of routing resources, e.g. only use the local interconnect. Should the automatic router fail to route a design successfully, the designer can use the layout editor to route certain nets manually.

Typically, the final layout is achieved only after a number of iterations. The ability to predict the outcome of changes made to the circuit specification is therefore of utmost importance. Our tools comply with this requirement by employing only *deterministic algorithms*. Stochastic algorithms, such as simulated annealing, are ruled out, as minor changes to the circuit specification may result in drastically different layouts.

4 Speed of Design Cycle

Current CAD tools take a considerable amount of runtime (several minutes to hours) to compile, place and route a design. One goal of the presented tools is to achieve design cycle times that lie in the same range as those common in software development, namely minutes at most. The Lola front-end and the XC6200 back-end [14] achieve this through various techniques discussed in this section.

4.1 Lola HDL Compilation

Due to the simplicity of the Lola language, most notably the restriction to a structural description style, the compilation process is straightforward. No elaboration process has to be performed, i.e.

the mapping of source language constructs to implementable gates is obvious. A two-pass compiler is used, which first translates the source code into a syntax tree and then interprets this syntax tree, generating the universal data structure directly into main memory. The first pass takes time linear in the size of the source code and the second pass takes time linear in the size of the described circuit.

4.2 Technology Mapping to the XC6200

The Xilinx XC6200 FPGA consists of an array of simple cells and a hierarchical routing network [23]. Each cell can implement any function of one or two inputs or a multiplexer, and contains an optional register, possibly with feedback. The match between the universal data structure and the possible cell configurations of the XC6200 is almost perfect. Only simple transformation steps have to be performed, such as translating an SR-latch into two cross-coupled Nand-gates. Packing multiple components into a single cell is deferred to the placement phase, which deals with the geometric properties of the circuit. Therefore, no time-consuming packing step has to be performed, as is the case for most coarse-grained FPGAs like the XC4000 series. The mapping process takes time linear in the size of the circuit.

4.3 Placement

The XC6200 back-end uses a *constructive, deterministic placement algorithm*. For the same input it produces the same output, which is a very important and desirable property of a tool that is used iteratively and interactively. It gives the designer the least surprises when a design is recompiled. Stochastic placement algorithms such as simulated annealing [12] are inappropriate for this task, as they typically produce different results every time they are run and exhibit long runtimes.

The placing algorithm proceeds bottom-up, placing the innermost subcircuits (templates) first. It is similar to the algorithm described in [15]. Within a template, it proceeds as follows: first, instances and expression trees with associated position hints are placed. Second, *array structures* are placed using a simple heuristic that places elements of an array either from left to right or from bottom to top, depending on the aspect ratio of the element. A good heuristic for arrays is essential for the placement of regular, bit-sliced designs which frequently occur in data paths. Finally, individual instances and expression trees are placed using a recursive algorithm: the root of an expression is placed into the first available cell. The expression trees, from which the root cell reads, are placed recursively to the right of the root cell and above it. The tree above is offset by the vertical height of the tree to the right of the cell. Free space is managed using a bitmap. This simple placement strategy does not produce dense layouts, but is fast and guarantees a routable design. If necessary, the user can optimize this initial placement manually. Figures 2 and 3 give two examples of how expressions and arrays are placed.

Once a template is placed, the derived *positional information is propagated to all instances* of that same template. This preserves the invariant of the front-end, which requires that all instances of the same template have the same structural, placement, and wiring information. Moreover, it also speeds up the placement algorithm, which uses time linear in the size of the circuit.

For larger circuits, which cannot be placed using this simple strategy, a floor-planner can be used to place subcircuits by hand and optimize their layouts individually.

4.4 Routing

The routing algorithm used in the back-end is a *maze-running router* based on the algorithm presented in [13]. It finds a path between

```
TYPE Example1; Forest
   IN a, b, c, d, e: [N] BIT;
   OUT z: [N] BIT;
BEGIN
   FOR i := 0 .. N−1 DO
   z.i := ~((a.i * b.i) − (c.i + ~d.i * e.i))
   END
END Example1;
```

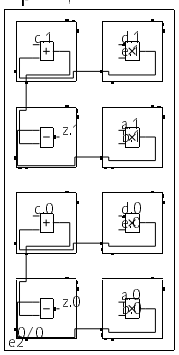

Figure 2: Compact Placement of Expressions and Arrays

```
TYPE Example2(N); Selector
   IN a, b, c, d: BIT; q, r, s, t: [N] BIT;
   OUT p: [N] BIT;
BEGIN
   FOR i := 0 .. N−1 DO
   p.i := a * q.i + b * r.i + c * s.i + d * t.i
   END
END Example2;
```

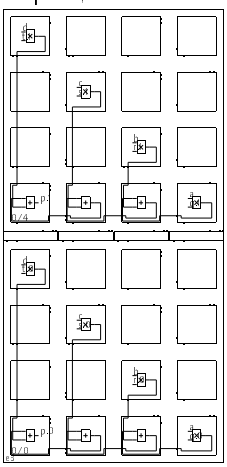

Figure 3: Placement Leaving Empty Cells

two cells (terminals) by spreading a wave from the destination towards the source until it finds the source cell or a wire segment driven by that source cell. A cost function determines the shape of the spreading wave.

The router proceeds bottom-up, routing the innermost templates first. Since all instances of a given template must have identical wiring, the router must take into account the different positions of the instances when determining the routing resources available for routing the given template. It sorts all nets according to their length and routes the shortest nets first. This simple, but effective, scheduling policy achieves quite satisfactory results.

To limit the size of the wave expansion, a *bounding rectangle* is used, which bounds the size of the wave. If a subcircuit is routed, the size of this rectangle is the size of the subcircuit's bounding box. If the net is in the top-level the rectangle is made $1/4$ larger on each side than the bounding box spanned by the source (S) and destination (D) nodes (cf. Figure 4). If routing fails within this rectangle, it is enlarged to the size of the chip and a new attempt is made. The effectiveness of this two-phase approach is dramatic, as it can reduce the routing times by an order of magnitude.

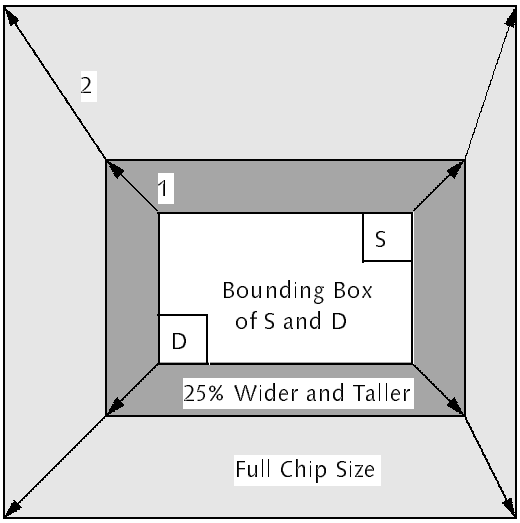

Figure 4: Two-Phase Growing of Router Bounding Box

Once a template is routed, the *routing information is propagated to all instances* of that template occurring in the design. This propagation process speeds up the routing time of the whole design considerably, as the costly wave spreading is only performed once for each net in each template. In designs with many repetitive structures, the speedup is directly proportional to the number of instances of the same template.

To allow for manual intervention by the user, the router takes already routed nets into account by extracting the connectivity information prior to routing. Critical nets can therefore be pre-routed manually.

5 Evaluation

We evaluate the Lola front-end and the XC6200 back-end and compare it to the XACT Step 6000 V1.1.2 software available from the chip vendor. While our system offers an integrated design flow from HDL specification to bitstream generation, XACT provides the back-end functionality and relies on third party front-ends. The measurements were carried out on a Digital Celebris GL 5166ST PC, equipped with a 166 MHz Intel Pentium processor, 256 KB of second-level cache, 128 MB of main memory, running Microsoft's Windows NT operating system, version 4.0. The Lola system is implemented in the Oberon-2 programming language [16] and runs within ETH's Oberon for Windows System V4.0 [11] using the implementation from the University of Linz, version 2.0.

5.1 Architecture Independence

The usefulness of the framework approach with an architecture-independent front-end and several architecture-dependent back-ends manifests itself in the size of the tools. Table 1 lists the software complexity of the front-end and of two back-ends, one for the Xilinx XC6200 and one for the Atmel AT6000 FPGA. The AT6000 back-end consists of a layout editor and bitstream generator. It was developed by a student and proves that a layout editor back-end can be developed by a programmer with no prior knowledge of the framework within reasonable time (3 months).

It is interesting to compare the sizes of the framework front-end to the XC6200 back-end. Note that in addition to the tools described in Section 4, the XC6200 back-end includes a bitstream generator and a timing analyzer, as well as hardware driver software. The front-end is nearly of the same size as the back-end. Put in another way, approximately *40% of the circuit design system is architecture-independent*. This fact clearly supports our proposition that a common architecture-independent front-end substantially reduces the effort to develop new back-ends.

Subsystem	Lines	Object (KB)
Front-End	11300	199
XC6200 Back-End	18100	296
Total (Front-End+XC6200)	29400	495
AT6000 Layout Editor	4400	80

Table 1: Software Size

For comparison, the commercial tool XACT running under Windows NT has an object code size of 1192 KB. It is more than twice as large as our system and features neither an HDL compiler nor does it contain architecture-independent parts, which may be reused for different architectures.

Memory requirements of our tools are modest. The biggest design of the next section is compiled, placed and routed using no more than 16 MB, while the memory requirement of XACT for the same design is 46 MB.

5.2 Speed of Design Cycle

We use two designs to evaluate the tools. The first is a *floating point adder* for 16-bit operands. The second is a *pattern matcher*, which consists of a regular datapath, and a small amount of random logic. It matches 5-bit characters stored in the FPGA (the patterns) against a stream of 5-bit characters (the text) and signals a match. Three design variants are evaluated: one with 2 parallel pattern matchers of 4 characters each, one with 16 pattern matchers of 12 characters each and one with 32 parallel pattern matchers of 24 characters each. Both designs are data-path intensive circuits, for which the XC6200 is particularly well suited. Table 2 lists the characteristics of the four designs after successful layout synthesis. The biggest design is implemented on an XC6264 (128x128 cells) while all other designs are implemented on an XC6216 (64x64 cells). Figures 5 and 6 show the placed and routed layouts of the floating point adder and the medium pattern matcher, respectively.

Table 3 shows the time spent in each phase of the Lola system. Note that routing is not involved in the design cycle until the user is satisfied with the placement of the circuit. Therefore the first

	CLBs	Nets	Bounding Box	Util.
FP-Adder	542	1283	64 x 34	25%
Small PM	248	630	18 x 46	30%
Medium PM	3048	6310	60 x 61	83%
Large PM	11748	23830	107 x 121	90%

Table 2: Design Characteristics

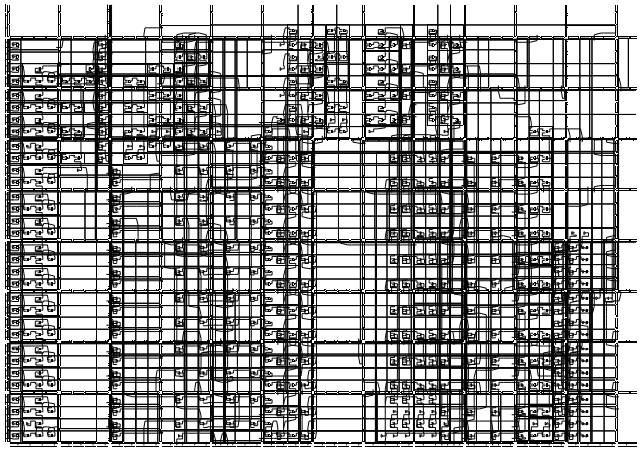

Figure 5: Layout of Floating Point Adder

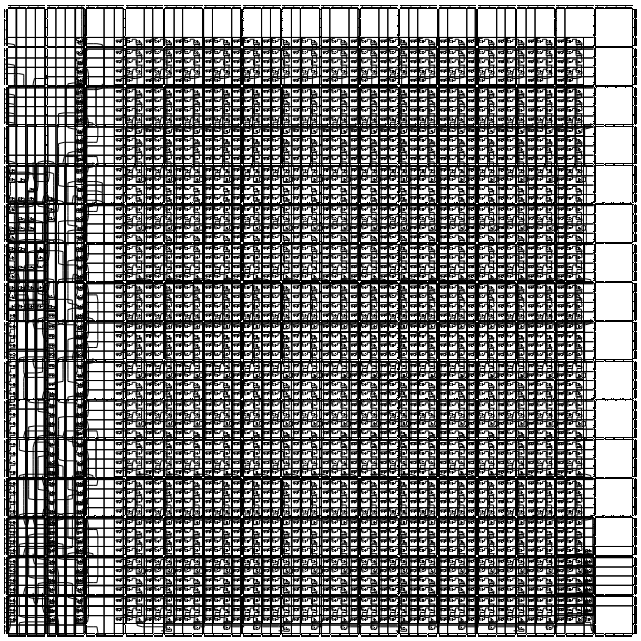

Figure 6: Layout of Medium Pattern Matcher

column lists the combined times of HDL compilation, mapping and placement. The (nh)-rows list the results for Lola code without placement hints. The number of unrouted connections is listed as well and clearly indicates how the quality of the routing is affected by the placement. The time for routing dominates the total design cycle time.

	Compile+ Place	Route	Total	Unroutes
FP-Adder (nh)	1.1	16.3	17.4	32
FP-Adder	1.1	4.5	5.6	0
Small PM (nh)	0.2	6.4	6.6	21
Small PM	0.3	2.0	2.3	0
Medium PM	3.5	17.1	20.6	0
Large PM	33.5	162.6	196.1	0

Table 3: Speed of Lola System (Times in Seconds)

Table 4 lists the times spent in the XACT tool. Since the HDL compiler is not integrated into XACT, the first column lists the combined times for reading the mapped netlist and placement. The mapped netlists were produced with our Lola compiler and a conversion tool. With no hints, XACT uses more time in the placement phase, trying to produce a good placement using stochastic algorithms. Repetitive runs on the same input do not yield the same result, which can affect the result of the routing phase as well. Hence, little progress can be made between iterations. The placement and the routing can be influenced by the user through various switches. To produce the data presented in Table 4, those settings were chosen that ran the fastest, or achieved a completed design.

	Read+ Place	Route	Total	Unroutes
FP-Adder (nh)	58.4	1046.2	1104.6	81
FP-Adder	5.9	125.2	131.1	0
Small PM (nh)	6.6	683.1	689.7	9
Small PM	3.0	281.1	284.1	0
Medium PM	22.2	216.5	238.7	0
Large PM	273.9	2543.1	2817.0	0

Table 4: Speed of XACT (Times in Seconds)

Table 5 lists the total times and the speedup obtained by using the Lola system. As the table shows, the Lola system is *one to two orders of magnitude faster* than the commercial tool. In contrast to XACT, our router does not support the "Magic" routing resource of the XC6200 — but still routes the designs — and only supports one global clock signal. However, this does not fully explain the difference in execution time. Moreover, the times for our tools include HDL compilation. Commercial HDL compilers are typically at least an order of magnitude slower than our Lola compiler.

The tables do not show quantitative results of the layouts because our timing analyzer is not yet fully functional. Inspection of the layouts, however, reveals critical paths of similar lengths.

Our system exhibits exceptionally fast turnaround times and is therefore well suited for interactive circuit development. The fast turnaround times of compile, map and place are especially noticeable when many design iterations are being performed.

	XACT	Lola	Speedup
FP-Adder (nh)	1104.6	17.4	63.5
FP-Adder	131.1	5.6	23.4
Small PM (nh)	689.7	6.6	104.5
Small PM	284.1	2.3	123.5
Medium PM	238.7	20.6	11.6
Large PM	2817.0	196.1	14.3

Table 5: Speed of Lola System vs. XACT (Times in Seconds)

6 Related Work

Many different frameworks for circuit design are reported in the literature, and the term "framework" is defined in various contexts. For instance, the CAD Framework Initiative (CFI), an international consortium developing framework standards, defines a framework as "a software infrastructure that provides a common operating environment for CAD tools" [6]. This definition targets the *interoperability of loosely coupled design tools* through a standard layer which is separate from the tools. It *encapsulates* existing tools which have been developed independently and thus *focuses on the management* rather than the implementation of design tools. Exemplary for this philosophy is the Nelsis framework [17, 19].

Our front-end differs from this approach in that it *closely couples extensible design tools*. It does not need any data translators since a common data structure is used. More in the spirit of our tools is the FACE environment [18], which is a framework containing a design manager and a user interface toolkit centered around a common design representation model.

Because the bitstream formats of most FPGAs are kept proprietary by their respective vendors, CAD tools developed by third parties generate netlists that are then read by commercial tools. Therefore, these third party tools suffer from the lack of integration and speed and the design cycle times are slow, although these times are seldom published in the literature. Examples for such tools are PamDC from Digital's Paris Research Laboratory [4] and the SPLASH-tools from the Supercomputing Research Center in Maryland [2]. The only systems we know of, which have comparably fast turnaround times are Tsutsuji [7] for the Teramac custom computing machine from Hewlett-Packard Laboratories [1], and the Debora/CALLAS tools for the Algotronix CAL architecture [10]. The bitstream formats of both FPGAs were available to the tool developers. Compared to our system, the CALLAS synthesis tools make no use of hierarchical information and the Debora HDL can not be annotated with placement information.

7 Summary and Conclusions

We have developed circuit design tools for FPGAs which feature a *very fast design cycle*. They give the user *tight control over the implementation process* and encourage an iterative, exploratory design style. This is particularly useful for experienced users who push the technology to its limits. Our tools should be seen as *complements*, rather than replacements, to sophisticated design tools that offer fully automatic synthesis at the expense of execution time.

The separation into an architecture-independent front-end and architecture-dependent back-ends is beneficial, as it relieves the tool implementor from having to (re)implement common behavior for each back-end anew.

By centering all tools around a universal data structure, the speed of the tools is improved and the memory requirements are lowered. *Preserving the hierarchical information* available on the HDL level throughout the system proved to be valuable both to enhance the predictability of the synthesized layouts and to reduce execution times of the design tools.

The resulting *design cycle is one to two orders of magnitude faster* than what can be achieved with vendor-supplied tools and approaches that of tools for software development. We hope that this enabling technology will spark interest in the *software community* to use FPGAs for custom computing applications.

Acknowledgments

We would like to thank Marco Sanvido for implementing a timing analyzer for the XC6200 FPGA and Daniel Hofmann for the implementation of the Atmel AT6000 layout editor. We are grateful to Xilinx Development Corporation in Scotland for their continuing support and to Virtual Computer Corporation in California for making our tools available to a wider community.

The Lola tools can be downloaded free of charge from http://www.-lola.ethz.ch and a version supporting the H.O.T. Works development system of Virtual Computer Corporation is available from http://www.vcc.com.

References

[1] R. Amerson, R. J. Carter, W. B. Culbertson, P. Kuekes, G. Snider. Teramac — Configurable Custom Computing. *Proc. IEEE Symposium on FPGAs for Custom Computing Machines.* IEEE Computer Society Press, 1995.

[2] J. M. Arnold, D. A. Buell, E. G. Davis. Splash 2. *Proc. 4th Annual ACM Symposium on Parallel Algorithms and Architectures*, 1992.

[3] Atmel. *Configurable Logic: Design & Application Book*, 1995.

[4] P. Bertin, H. Touati. PAM Programming Environments: Practice and Experience. *Proc. IEEE Symposium on FPGAs for Custom Computing Machines.* IEEE Computer Society Press, 1994.

[5] R. E. Bryant. Symbolic Boolean Manipulation with Ordered Binary Decision Diagrams. *ACM Computing Surveys*, Vol. 24, 293–318, 1992.

[6] CFI Architecture Technical Subcommittee. *CAD Framework Users, Goals, and Objectives, Version 0.91*, CAD Framework Initiative, 1990.

[7] B. Culbertson, T. Osame, Y. Otsuru, J. B. Shackleford, M. Tanaka. *The HP Tsutsuji Logic Synthesis System.* Hewlett-Packard Journal, August 1993.

[8] S. Gehring. *An Integrated Framework for Structured Circuit Design with Field-Programmable Gate Arrays.* Dissertation No. 12188, ETH Zürich, 1997 (http://www.inf.ethz.-ch/publications/diss.html).

[9] S. Gehring, S. Ludwig. The Trianus System and its Application to Custom Computing.*Proc. 6th Intl. Workshop on Field-Programmable Logic and Applications.* LNCS 1142, Springer, 1996.

[10] B. Heeb and C. Pfister. Chameleon: A Workstation of a Different Colour. *2nd Intl. Workshop on Field-Programmable Logic and Applications.* LNCS 705, Springer, 1992.

[11] Institute for Computer Systems. *The Oberon Archive.* ftp:-//ftp.inf.ethz.ch/pub/software/Oberon.

[12] S. Kirkpatrick, C. D. Gelatt, Jr., M. P. Vecci. Optimization by Simulated Annealing. *Science*, Vol. 220, May, 1983.

[13] C. Y. Lee. An Algorithm for Path Connections and its Applications. *IRE Trans. Electronic Computer*, Vol. EC-10, September 1961.

[14] S. Ludwig. *Hades — Fast Hardware Synthesis Tools and a Reconfigurable Coprocessor*. Dissertation No. 12276, ETH Zürich, 1997 (http://www.inf.ethz.ch/publications/-diss.html).

[15] L. M. Monier, J. Dion. Recursive Layout Generation. *Proc. 16th Conference on Advanced Research in VLSI.* IEEE Computer Society Press, 1995.

[16] H. Mössenböck, N. Wirth. The Programming Language Oberon-2. *Structured Programming.* Vol. 12, No. 4, 1991.

[17] Technical University of Delft. *The Nelsis CAD Framework*. http://www.ddtc.dimes.tudelft.nl, 1996.

[18] W. Smith, D. Duff, M. Dragomirecky, J. Caldwell, M. Hartman, J. Jasica, M. d'Abreu. FACE Core Environment: The Model and its Application in CAE/CAD Tool Development.*Proc. 23rd Design Automation Conference*, IEEE, 1989.

[19] P. van der Wolf. *CAD Frameworks — Principles and Architecture.* Kluwer Academic Publishers, 1994.

[20] R. Woods, A. Cassidy, J. Gray. VLSI Architectures for Field Programmable Gate Arrays: A Case Study.*Proc. of the IEEE Symposium on FPGAs for Custom Computing Machines.* IEEE Computer Society Press, 1996.

[21] N. Wirth. *Digital Circuit Design. An Introductory Textbook*. Springer, 1995.

[22] N. Wirth. The Language Lola and Programmable Devices in Teaching Digital Circuit Design. *Proc. of the 2nd Intl. Andrei Ershov Memorial Conference*. LNCS 1181, Springer, 1996.

[23] Xilinx. *The Programmable Logic Data Book*, September 1996.